DRAFT

Peninsula Township

Zoning Ordinance

DRAFT DATED: October 31, 2016

Amended: _____

Effective: _____

Table of Contents

Article 1 Title, Purpose, and Scope 1-1

Section 1.01 Preamble (currently Preamble and Introductory Paragraph) 1-1

Section 1.02 Short Title (currently Article 1) 1-1

Section 1.03 Purpose (currently Section 2.1) 1-1

Section 1.04 Scope (currently Section 2.2) 1-1

Section 1.05 Severability (currently Article 10) 1-2

Section 1.06 Effective Date (currently Article 12) 1-2

Section 1.07 Conflicting Regulations (currently Section 4.2.2) 1-2

Article 2 Definitions 2-1

Section 2.01 Rules Applying to the Text (currently Section 3.1) 2-1

Section 2.02 Definitions (currently Section 3.2) 2-1

Article 3 Zoning Districts and Map 3-1

Section 3.01 Districts Established (currently Section 6.1.1) 3-1

Section 3.02 Zoning Districts Map (currently Section 6.1.2) 3-1

Section 3.03 Interpretation of District Boundaries (currently Section 6.1.3) 3-1

Section 3.04 Scope of Regulations (currently Section 6.1.4(1)) 3-2

Section 3.05 Categories within Zoning Districts (currently Section 6.1.5 and Section 8.7.2) 3-2

Section 3.06 Permitted Uses by District (NEW Table of Land Uses, which includes applicable parts of Sections 6.2 – 6.7) 3-3

Section 3.07 A-1, Agricultural District (currently Section 6.7) 3-5

Section 3.08 R-1A, Rural and Hillside Residential District (currently Section 6.2) 3-6

Section 3.09 R-1B, Coastal Zone Residential District (currently Section 6.3) 3-7

Section 3.10 R-1C, Suburban Residential Development District (currently Section 6.4) 3-8

Section 3.11 R-1D, Community Residential District (currently Section 6.5) 3-9

Section 3.12 C-1, Commercial District (currently Section 6.6) 3-10

Section 3.13 Shoreline Overlay District (NEW) 3-11

Section 3.14 Airport Overlay District (currently Section 7.9) 3-21

Section 3.15 Conservation Easement Restricted Farmland (currently Section 6.7.5) 3-24

Section 3.16 Productive Agricultural Buffer Overlay (Currently Section 7.2.7) 3-25

Section 3.17 Neighborhood Overlay District 3-27

Article 4 Schedule of Regulations 4-1

Section 4.01 Statement of Purpose (NEW SECTION) 4-1

Table of Contents

Section 4.02 Schedule of Regulations (Currently Section 6.8) 4-1

Section 4.03 Footnotes to Schedule of Regulations (Currently Section 6.8.1) 4-1

Article 5 Supplemental Zoning District Standards 5-1

Section 5.01 Planned Unit Developments (currently Section 8.3, Section 7.2.6, and Section 6.5A) 5-1

Section 5.02 Site Condominiums (Currently Section 6.9) 5-8

Article 6 Standards Applicable to Specific Uses 6-1

Section 6.01 Adult Foster Care, Small Group Home (currently Section 8.7.3(9)) 6-1

Section 6.02 Barn Storage (currently Section 6.7.2(18)) 6-1

Section 6.03 Bed and Breakfast Establishments (currently Section 8.7.3(6)) 6-2

Section 6.04 Child Care Center (NEW SECTION) 6-3

Section 6.05 Child Care, Group Home (currently Section 6.2.2(7)) 6-4

Section 6.06 Drive-Through Uses (NEW SECTION) 6-5

Section 6.07 Dwelling, Single-Family Residential Detached (NEW SECTION) 6-5

Section 6.08 Dwelling, Single-Family Residential Attached (NEW SECTION) 6-6

Section 6.09 Farming and Horticultural Use (currently Section 6.2.2(6)) 6-7

Section 6.10 Food Processing Plants (currently 8.5) 6-7

Section 6.11 Gasoline Stations and Automobile Service Stations (currently Section 8.8) 6-9

Section 6.12 Golf Courses and Country Clubs (currently Section 8.7.3(4)) 6-10

Section 6.13 Greenhouses and Nurseries (Retail Sales) (NEW SECTION) 6-11

Section 6.14 Guest Houses (currently Section 6.2.2(2)(b)) 6-12

Section 6.15 Home Occupation (currently Section 6.2.3(2)) 6-12

Section 6.16 Hotels, Motels, and Tourist Courts (currently 8.10) 6-14

Section 6.17 Incinerators and Sanitary Landfills (currently Section 8.7.3(1)) 6-16

Section 6.18 Institutional Structures and Uses (currently Section 8.6) 6-16

Section 6.19 Indoor Recreation (NEW SECTION) 6-17

Section 6.20 Junk Yard (NEW SECTION) 6-17

Section 6.21 Keeping of Domestic Pets (currently Section 6.2.2(5)) 6-18

Section 6.22 Kennels (NEW SECTION) 6-18

Section 6.23 Local Food Production Facility (NEW USE) 6-19

Section 6.24 Marinas (currently Section 8.7.3(5)) 6-21

Section 6.25 Mobile Homes (On Individual Lots: currently Section 6.7.2(3); In Residential Districts; currently 8.9) 6-21

Section 6.26 Mobile Home Parks (currently Section 8.2 and Section 7.2.6) 6-23

Section 6.27 Public and Private Conservation Areas (NEW SECTION) 6-26

Section 6.28 Public Areas, Public Parks, and Public Recreation (currently Section 6.7.2(13)) . 6-26
Section 6.29 Recreational Unit Parks and Campgrounds (currently Section 8.4) 6-26
Section 6.30 Remote Winery Tasting Rooms (currently Section 8.7.3(12)) 6-30
Section 6.31 Rental of Non-Owner Occupied Dwellings (currently Section 6.2.2(2) (e)) 6-31
Section 6.32 Roadside Stands (currently Section 6.7.2(8)) 6-31
Section 6.33 Self Service Storage Facility (currently Section 6.6.5) 6-32
Section 6.34 Sewage Treatment and Disposal Installations (currently Section 8.7.3(2)) 6-33
Section 6.35 Special Open Space Uses (currently Section 8.7.3(3)) 6-33
Section 6.36 Tenant Houses (currently Section 6.7.2(12)) 6-34
Section 6.37 Warehousing and Light Industrial (currently Section 8.7.3(7)) 6-34
Section 6.38 Winery, Use by Right (currently Section 8.7.3(10) and Section 6.7.2(19) – currently a "Farm Processing Facility") 6-35
Section 6.39 Winery-Chateau (currently Section 8.7.3(10)/NEW) 6-41
Section 6.40 Wind Energy Conversion Systems (currently Section 8.7.3(8)) 6-48
Section 6.41 Wireless Communications Facilities (currently Sections 7.12 and 8.7.3(11)) 6-50
Article 7 General Provisions 7-1
Section 7.01 Essential Services (currently Section 5.8) 7-1
Section 7.02 Performance Guarantees (currently Sections 5.9, 6.9.6.3, and 7.10.12) 7-1
Section 7.03 Storage of Recreational Vehicles (currently Section 6.2.2(4)) 7-3
Section 7.04 Temporary Buildings (currently Section 6.2.3(1)) 7-4
Section 7.05 Use of Structure for Temporary Dwelling (currently Section 7.2.1) 7-4
Section 7.06 Outdoor Storage (currently Sections 6.6.3(1) and 7.2.4) 7-4
Section 7.07 Sanitation Requirements (currently Section 7.1.2) 7-4
Section 7.08 Supplementary Height Regulations (currently Sections 7.3.1 and 7.3.2) 7-4
Section 7.09 Developments Abutting Agricultural Land (currently Section 7.3.3 and Section 7.7) 7-5
Section 7.10 Lots Existing and of Record on the Effective Date of this Ordinance (currently part of Section 7.3.4) 7-7
Section 7.11 One Dwelling Unit per Lot (currently part of Section 7.3.4) 7-7
Section 7.12 Clear Vision Area (NEW SECTION) 7-8
Section 7.13 Accessory Buildings and Structures (currently Section 6.2.2(2)(a)) 7-9
Section 7.14 Fences and Walls (currently Section 7.13) 7-10
Section 7.15 Swimming Pools (NEW SECTION) 7-11
Section 7.16 Accessory Solar Energy (NEW SECTION) 7-12
Article 8 Environmental Performance Standards 8-1
Section 8.01 Wetland Restrictions (currently part of Section 6.9.3.7) 8-1

Table of Contents

Section 8.02 Floodplain Controls and Restrictions (currently Section 7.4.7 and part of Section 6.9.3.7) 8-1

Section 8.03 Removal of Fruit-Producing Trees, Vines, or Shrubs from Properties Being Developed (currently Section 7.8 and part of Section 6.9.3.8) 8-2

Section 8.04 Soil Erosion and Sedimentation Control and Protection of Steep Slopes (currently Section 6.9.3.9) 8-3

Section 8.05 Mining or Removal of Topsoil, Sand, Gravel, and Minerals (currently Section 7.2.3) 8-3

Section 8.06 Storm Water Management (currently Section 7.2.5) 8-4

Section 8.07 Exterior Lighting (currently Section 7.14) 8-5

Article 9 Parking, Loading, Access Management, and Private Roads 9-1

Section 9.01 General Off-Street Parking and Loading Regulations (currently Section 6.10, Section 7.6.1, and Section 7.6.2) 9-1

Section 9.02 Parking Space Requirements (currently Section 7.6.3) 9-2

Section 9.03 Off-Street Parking Site Development Requirements (currently Section 7.6.4(1) and (2)) 9-4

Section 9.04 Off-Street Loading and Unloading 9-6

Section 9.05 Snow Storage (currently Section 7.6.4(4)) 9-6

Section 9.06 Driveway Clearance (currently Section 6.2.5) 9-7

Section 9.07 Private Roads (currently Section 7.10) 9-7

Section 9.08 Shared Driveways 9-16

Article 10 Landscaping and Screening 10-1

Section 10.01 Intent (NEW SECTION) 10-1

Section 10.02 Scope and Application (Section 7.6.4(3)(d)) 10-1

Section 10.03 Landscaping Design Standards (NEW SECTION, which will include standards from Section 6.6.3(3), and Section 7.6.4(3)) 10-1

Section 10.04 Standards for Plant Materials (part of Section 7.6.4(3)(b)(5)) 10-3

Section 10.05 Landscape Installation and Maintenance (parts of Section 7.6.4(3)) 10-4

Section 10.06 Modifications (Section 7.6.4(3)(b)(6)) 10-5

Article 11 Signs 11-1

Section 11.01 Purpose (currently introductory paragraph of Section 7.11) 11-1

Section 11.02 Definitions (NEW SECTION, which includes existing definitions in Section 3.2 related to signs) 11-2

Section 11.03 Substitution Clause (NEW SECTION) 11-4

Section 11.04 Measurement of Sign Area and Height (currently part of Section 7.11.1) 11-5

Section 11.05 Sign Placement and Design Requirements (currently part of Section 7.11.1) 11-5

Section 11.06 Prohibited Signs (currently Section 7.11.2 and parts of Section 7.11.1) 11-6

Section 11.07 Signs Permitted in All Districts (currently Section 7.11.3) 11-8
Section 11.08 Sign Regulations for Specific Zoning Districts (currently Sections 7.11.4 – 7.11.6, including part of Table 7.11.6) 11-9
Section 11.09 Billboards (Permanent Off-Premise Commercial Advertising Signs) (current Section 7.11.1(6), 7.11.1(20), and 7.11.2(12)) 11-10
Section 11.10 Illumination and Changeable Copy Standards (currently part of Section 7.14.3(5) and part of Section 7.11.1) 11-11
Section 11.11 Nonconforming Signs (NEW SECTION) 11-11
Section 11.12 Appeals and Variances (currently part of Table 7.11.6) 11-12
Article 12 Nonconformities 12-1
Section 12.01 Intent and Purpose (currently Section 7.5.1) 12-1
Section 12.02 Nonconforming Lots (NEW SECTION) 12-1
Section 12.03 Nonconforming Uses (currently part of Section 7.5.1 and Section 7.5.2) 12-1
Section 12.04 Nonconforming Structures (currently Sections 7.5.3 – 7.5.6) 12-1
Section 12.05 Zoning District Changes (currently Section 7.5.7) 12-2
Article 13 Administrative Organization 13-1
Section 13.01 Zoning Administrator (currently Sections 4.1.1 and 4.1.2) 13-1
Section 13.02 Township Board (NEW SECTION) 13-1
Section 13.03 Planning Commission (NEW SECTION) 13-2
Section 13.04 Zoning Board of Appeals (currently Sections 5.1, 5.2, part of 5.3, and 5.7) 13-2
Article 14 Administrative Procedures 14-1
Section 14.01 Permits 14-1
Section 14.02 Site Plan Review 14-3
Section 14.03 Special Land Use Review 14-6
Section 14.04 Variances and Appeals 14-12
Section 14.05 Amendments (currently Article 9) 14-16
Section 14.06 Public Hearing Procedures (currently Sections 7.12.1(8)(a) and 8.1.2(3)) 14-27
Section 14.07 Enforcement 14-29

Article 1 Title, Purpose, and Scope

Section 1.01 Preamble (currently Preamble and Introductory Paragraph)

An Ordinance to amend the Peninsula Township Zoning Ordinance designated as an Ordinance to establish zoning districts and land use regulations in the Township of Peninsula, County of Grand Traverse and State of Michigan, in accordance with the provisions of Public Act 110 of 2006 as amended; to define certain terms used herein; to provide for regulations governing nonconforming uses and structures; to establish a Board of Appeals and define its duties and powers; to provide for the administration and enforcement; to provide for amendment; and to provide penalties for the violation of this Ordinance.

Deleted: Act 184 of the Public Acts of 1943

The Peninsula Township Zoning Ordinance is hereby amended to provide as follows, viz:

Section 1.02 Short Title (currently Article 1)

This Ordinance shall be known as "Peninsula Township Zoning Ordinance" and will be referred to herein as "this Ordinance."

Section 1.03 Purpose (currently Section 2.1)

The purposes of this Ordinance are as follows:

(A) To protect the public health, safety, morals and general welfare of the inhabitants of the Township;
(B) To provide for adequate light, air and convenience of access to secure safety from fire and other dangers;
(C) To avoid undue concentration of population by regulating minimum open spaces and by regulating and limiting types and locations of buildings, and regulating the location of trades, industries, and buildings designated for specific uses;
(D) To provide for the orderly development of the Township;
(E) To encourage the use of lands and resources of the Township in accordance with their character and adaptability;
(F) To provide for safety in traffic, adequacy of parking and reduce hazards to life and property;
(G) To facilitate the development of adequate systems of fire protection, education, recreation, water supplies and sanitary facilities;
(H) To conserve life, property, natural resources and the use of public funds for public services and improvements to conform with the most advantageous use of lands, resources and properties;
(I) To protect the quality of the shoreline and other environmentally sensitive areas;
(J) To preserve and protect productive agricultural land; and
(K) To protect the scenic viewsheds to the greatest extent practical.

Deleted: t
Deleted: t
Deleted: t
Deleted: t
Deleted: t
Deleted: t
Deleted: t
Deleted: and t
Deleted: .

Section 1.04 Scope (currently Section 2.2)

It is not intended by this Ordinance to repeal, abrogate, annul or in any way impair or interfere with existing provisions of law or ordinance, except as hereinafter specifically repealed, or with any rules, regulations or permits previously adopted or issued or which shall be adopted or issued pursuant to law, relating to the use of buildings or premises, or with any private restrictions placed upon property by

covenant or deed; provided, however, that where this Ordinance imposes a greater restriction upon the use of buildings or premises than are imposed or required by such existing provisions of law or ordinance or by such rules, regulations or permits or by such private restrictions, the provisions of this Ordinance shall control.

Section 1.05 Severability (currently Article 10)

If any clause, sentence, sub-sentence, paragraph, section or part of this Ordinance be adjudged by any court of competent jurisdiction to be invalid such judgement shall not affect, impair or invalidate the remainder thereof, but shall be confined in its operation to the clause, sentence, sub-sentence, paragraph, section or part thereof directly involved in the controversy in which said judgement shall have been rendered.

Section 1.06 Effective Date (currently Article 12)

The Peninsula Township Zoning Ordinance and any amendments thereto shall take effect pursuant to *Section 14.05* and Public Act 110 of 2006, as amended, upon passage by the Township Board.

Deleted: This amendment No. 6 to t

Deleted: immediate

Section 1.07 Conflicting Regulations (currently Section 4.2.2)

In the interpretation, application, and enforcement of the provisions of this Ordinance, whenever any provision or limitation imposed or required by the provisions of this Ordinance are more stringent than any other law or ordinance, then the provisions of this Ordinance shall govern, provided that whenever the provisions of any other law or ordinance impose more stringent requirements than are imposed or required by this Ordinance, then the provisions of such other law or ordinance shall govern where applicable.

Article 2 Definitions

Section 2.01 Rules Applying to the Text (currently Section 3.1)

For the purpose of this Ordinance, certain rules of construction apply to the text as follows:

(A) Words used in the present tense include the future tense; and the singular includes the plural, unless the context clearly indicates the contrary.

(B) The word "person" includes a corporation, company, partnership, family, or firm as well as an individual.

(C) The word "building" includes the word "structure".

(D) The word "lot" includes the word "plot", "tract", "parcel", "subdivision lot", or "site condominium lot."

(E) The term "shall" is always mandatory and not discretionary; the word "may" is permissive.

(F) The word "used" or "occupied" as applied to any land or building shall be construed to include the word "intended, arranged, or designed to be used or occupied".

(G) Any word or term not interpreted or defined by this Article shall be used with a meaning of common or standard utilization. A dictionary may be consulted.

Section 2.02 Definitions (currently Section 3.2)

(A) For the purpose of this Ordinance, certain terms or words used herein shall be interpreted or defined as follows:

(1) **Accessory Building or Accessory Structure.** A building or structure subordinate to, and located on the same lot as, a principal or main building, or the part of the main building occupied by or devoted exclusively to an accessory use. An accessory building or structure may have water and sanitary or septic sewer service, subject to the following restrictions:

(a) The accessory building shall not be used for dwelling use;
(b) There shall be no sleeping or laundry facilities; and
(c) All bathrooms, sinks, and other facilities requiring water and sanitary or septic services shall be located on the ground floor only.

Commercial agriculture buildings located on a farm are not classified as accessory buildings or accessory structures

(2) **Accessory Use.** A use customarily incidental and subordinate to the principal use or building located on the same lot as the principal use or building.

Deleted: or

Commented [PS1]: Additional text was added to prohibit dwelling use (e.g., sleeping and laundry facilities), but allowing limited water facilities on the ground floor only.

Deleted: subordinate

Deleted: with

(3) **Adequate Permanent Access.** A Road Access Easement or road Right-of-Way of sufficient width for roadway and snow storage purposes without infringing on neighboring or adjacent property. The dimensions of Adequate Permanent Access shall meet the requirements of *Section 9.07.*

(4) **Adult Foster Care Facility.** A governmental or nongovernmental establishment having as its principal function the receiving of adults for foster care. Subject to Michigan Public Act 218 of 1979, as amended, adult foster care facilities include facilities and foster care family homes for adults who are aged, mentally ill, developmentally disabled, or physically disabled who require supervision on an ongoing basis but who do not require continuous nursing care. An adult foster care facility does not include a nursing home, home for the aged, hospital, hospital for the mentally ill, facility for the developmentally disabled, county infirmary, child caring institution, an establishment commonly described as an alcohol or substance abuse rehabilitation center, a residential facility for persons released from or assigned to adult correctional institution, and any other use excluded under Act 218 of 1979, as amended.

(a) **Adult Foster Care, Family Home.** A private residence with the approved capacity to receive not more than 6 adults who shall be provided foster care for 5 or more days a week and for 2 or more consecutive weeks. The adult foster care family home licensee shall be a member of the household and an occupant of the residence.

(b) **Adult Foster Care, Small Group Home.** An adult foster care facility with the approved capacity of not more than 12 adults who shall be provided foster care.

(5) **Agricultural Labor Camp.** An agricultural labor camp means a tract of land and all buildings or other structures pertaining thereto, all or part of which is established, occupied, or used as living quarters for less than 5 migrant farm laborers engaged in agricultural activities, including related food processing.

(6) **Agricultural Labor Camp, Licensed.** An agricultural labor camp for migrant farm laborers licensed by the State of Michigan.

(7) **Alterations.** Any modification, additions, or change in construction or type of occupancy, any change or rearrangement in the structural parts of a building; any enlargement of a building, whether by extending a side or by increasing in height; or the moving from one location to another.

(8) **Basement.** An area of a building having part, but not less than one-half of its height below finished grade, measured at the center of the adjoining finished grade on both of the side elevations of the building. A basement shall be counted as a story for the purpose of height measurement if the vertical distance between the ceiling and the average level of the adjoining ground is more than 5 feet.

(9) **Bed and Breakfast Establishment.** Means a private residence that offers sleeping accommodations to transient tenants in 3 or fewer rooms for rent, is the owner's residence in which the owner resides while renting the rooms to transient tenants, and serves breakfasts at no extra cost to its transient tenants.

Deleted: An

Deleted: e

Deleted: r

Deleted: w

Deleted: The minimum adequate permanent access shall be thirty-three (33) feet in width.

Commented [PS2]: The current definition of "Adjacent – Adjoining Area" is not the common definition and the definition does not appear to have any application in the Zoning Ordinance.

Deleted: <#>**Adjacent - Adjoining Area.** That area of the Township bounded by major thoroughfares as described in the Township Major Thoroughfare Plan requiring the same land use designation in the Comprehensive Land Use Plan of Peninsula Township.¶
¶

Deleted: It

Deleted: s

Deleted: emotionally disturbed

Deleted: handicapped

Deleted: Adult foster care facility shall include homes for the aged

Deleted: five (

Deleted:)

Deleted: (ADDED BY AMENDMENT 90) (REVISED BY AMENDMENT 166B)

Deleted: Licensed

Deleted: (ADDED BY AMENDMENT 90)(REVISED BY AMENDMENT 166B)

Commented [PS3]: We recommend referring to basements as "stories" only if they are over a certain height above grade.

Deleted: story

Deleted: more

Deleted: (1/2)

Commented [PS4]: This text will require both side elevations to meet the height requirements.

Deleted: five (

Deleted:)

Deleted: or if used for business or dwelling purposes

Deleted: (REVISED BY AMENDMENT 136)

(10) Board of Appeals. Peninsula Township Zoning Board of Appeals.

(11) Boarding of Livestock. Providing care, custody and control of livestock for others, with or without remuneration, on agricultural land or in buildings incidental to the use for agricultural purposes but not for hourly rental of animals and not a petting farm.

(12) Boat Hoist. A devise to raise and/or store boats above or out of the water. Included are shore stations, hoists, inclined ramps with carts on rails or similar devices.

(13) Boat Livery. A boat livery is hereby defined and declared to be any structure, site, or tract of land utilized for the storage, servicing, or rental of boats and for the sale of hunting and/or fishing tackle, equipment, boats and etc. Unlike a Marina, a Boat Livery shall not sell fuel.

(14) Building. Any structure, either temporary or permanent, having a roof and used or built for the shelter or enclosure of persons, animals, chattels or property of any kind. This shall include tents, awnings and vehicles situated on private property and used for purposes of a building, whether or not mounted on wheels.

(15) Building Area. See "Floor Area."

(16) Building Elevation or Building Width. The width of the building foundation, excluding porches, measured along the main foundation of the building on each side.

(17) Building Envelope. An area identified on a site plan within which a building or structure may be located. A Building Envelope shall be defined by the minimum required setback lines, outside of which a building or structure cannot be built unless otherwise permitted in this Ordinance. See definition of "Building Lines."

(18) Building, Front line of. The line that coincides with the foundation of the building nearest the front line of the lot. This line includes sun parlors and enclosed porches, but does not include steps.

Deleted: (ADDED BY AMENDMENT 155A)

Deleted: (REVISED BY AMENDMENT 109A)

Commented [PS5]: The definition of "Boat House" was removed because our understanding is that they are not permitted on the Great Lakes.

Deleted: <#>**Boat House.** An enclosed structure designed for the use and storage of private boats and marine equipment having a maximum height of eleven (11) feet and a maximum area of 300 square feet.
¶

Deleted: (ADDED BY AMENDMENT 151)

Deleted: face

Deleted: face

(19) **Building, Height of.** The vertical distance measured from the median (i.e., center) elevation of the finished grade line of the ground of the center of each side of the building to the highest point of the roof. See Figure 1 below. In the example of Figure 1 below, the height of the building shall be the height of the "water side and/or walk-out side."

Figure 1. Building, Height of

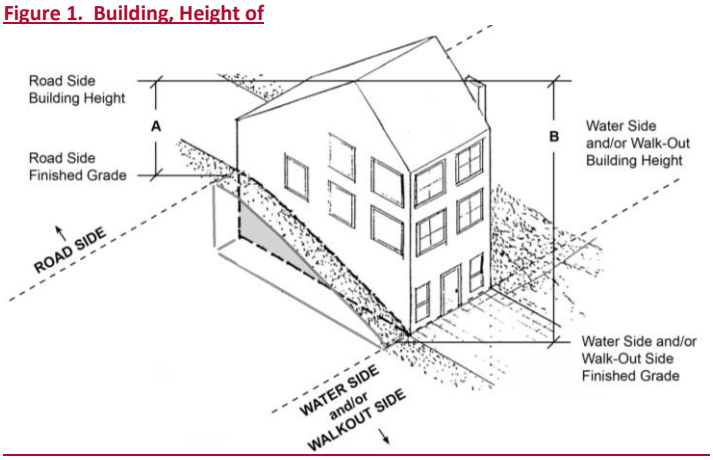

(20) **Building Lines.** See definition of "Building Envelope."

(21) **Building, Principal.** A building in which is conducted the main or principal use of the lot on which it is located.

(22) **Campground.** Means any parcel or tract of land under the control of any person wherein sites are offered for the use of the public or members of an organization, either free of charge or for a fee, for the establishment of temporary living quarters for 5 or more recreational units.

(23) **Cellar.** See "Basement."

(24) **Child Care Organization:** A facility for the care of children under 18 years of age, as licensed and regulated by the State under Act 116 of the Public Acts of 1973, as amended, and the associated rules promulgated by the State of Michigan. Such organizations shall be further defined as follows, which may be superseded by the Act:

(a) **"Child care center"** or **"day care center"** means a facility, other than a private residence, receiving 1 or more pre-school or school age children for care for period of less than 24 hours a day, and where the parents or guardians are not immediately available to the child. It includes a facility which provides care for not less than 2 consecutive weeks, regardless of the number of hours of care per day. The facility is generally described as a child care center, day care center, day nursery, nursery school, parent cooperative pre-school, play group, before- or after-school program, or drop-in center. "Child care center" or "day care center" does not include a Sunday

Deleted: mean

Deleted: about

Deleted: the front

Deleted:

Commented [PS6]: Because "Building Envelope" and "Building Lines" are essentially the same, it is best to make the definition the same and cross-reference.

Deleted: A line defining the minimum front, side and rear yard requirement outside of which no building or structure may be located.

Deleted: five (

Deleted:)

Commented [PS7]: Because "Basement" and "Cellar" are essentially the same, it is best to make the definition the same and cross-reference.

Deleted: A story having more than one-half (1/2) of its height below the average finished level of the adjoining ground. A cellar shall not be counted as a story for the purposes of height measurement in stories

Deleted: Department of Social Services

Deleted: more than 6

Deleted: group

school conducted by a religious institution, a facility operated by a religious institution where children are cared for during short periods of time while persons responsible for such children are attending religious services, or other excluded uses stated in the Act.

(b) "**Child Care, Family Home**" means a private home in which 1 but less than 7 minor children are received for care and supervision for periods of less than 24 hours a day, unattended by a parent or legal guardian, except children related to an adult member of the family by blood, marriage, or adoption. It includes a home that gives care to an unrelated child for more than 4 weeks during a calendar year.

(c) "**Child Care, Group Home**" means a private home in which more than 6 but not more than 12 minor children are given care and supervision for periods of less than 24 hours a day unattended by a parent or legal guardian, except children related to an adult member of the family by blood, marriage, or adoption. It includes a home that gives care to an unrelated child for more than 4 weeks during a calendar year.

(25) **Common land.** A parcel or parcels of land together with the improvements thereon, the use, maintenance, and enjoyment of which are intended to be shared by the owners and occupants of the individual building units in a planned unit development, subdivision, or site condominium.

(26) **Cupola.** Ornamental structures for architectural decoration placed in a prominent position, usually at the top of a larger roof or dome. They often appear as small buildings in their own right, like diminutive temples perched on top of a building. They are non-habitable and do not have interior access except for maintenance purposes. See *Section 7.08*.

(27) **Decibels.** A decibel is a unit of measurement of the intensity of sound. Sound level meters which are employed to measure the intensity of sound are calibrated in decibels.

(28) **Density.** The number of dwelling units residing upon, or to be developed upon, a net acre of land.

(29) **District, Zoning.** An area of land for which there are uniform regulations governing the use of buildings and premises, density of development, yard requirements, height limitations, and lot coverage.

(30) **Dwelling or Dwelling Unit.** A single building, or portion thereof, providing complete independent living facilities for 1 family for residential purposes, including permanent provisions for living, sleeping, cooking, and sanitation.

(31) **Dwelling, Multiple.** An attached dwelling other than a one-family dwelling including duplexes, triplexes, quadplexes, apartment houses, co-operatives, and attached single-family residences.

Deleted: or

Deleted: day care h

Deleted: four (

Deleted:)

Deleted: day care h

Deleted: (ADDED BY AMENDMENT 159)

Deleted: and

Commented [PS8]: The Planning Commission previously recommended deleting "heating" because some cottages don't have heat.

Deleted: heating,

Deleted: one

Deleted: condominiums

(32) Dwelling, Single-Family. A detached building designed for or occupied exclusively by one family.

(33) Easement. Any right to use and/or enter onto the real property of another without possessing it, which include but are not limited to areas dedicated for utilities and access (e.g., beach access, driveway, and Road, Access Easement).

(34) Erected. The building, construction, alteration, reconstruction, moving upon, or any physical activity upon a premises or lot.

(35) Essential Services. The erection, construction, alteration or maintenance by public utilities or municipal departments or commissions, of underground or overhead gas, electrical, telephone transmission or distribution system including poles, wires, main, drains, sewers, pipes, conduits, cable, towers, fire alarm boxes, police call boxes, traffic signals, hydrants and other similar equipment and accessories in connection therewith, but not including buildings, reasonably necessary for the furnishing of adequate service by such public utilities, departments, or commissions. Essential services shall not include wireless communication facilities, solar energy facilities, or wind energy facilities.

(36) Event. A planned gathering or activity on a set date and time, and at a specific location.

(37) Existing Building. A building existing or for which the foundations are in place or upon which there has been substantial work done prior to the effective date of this Ordinance or any amendment thereto.

(38) Existing Use. A use of premises or buildings or structures actually in operation, openly, visibly and notoriously prior to the effective date of this Ordinance or any amendment thereto.

(39) Family. "Family" means either of the following:

(a) An individual or group of 2 or more persons living together and related by the bonds of blood, marriage or adoption, together with foster children and domestic staff of the principal occupants and not more than one additional unrelated person, who are domiciled together as a single, domestic, housekeeping unit in a dwelling unit; or

(b) The functional equivalent of the domestic family, that is, a collective number of individuals domiciled together in one dwelling unit whose relationship is of a continuing non-transient domestic character and is the functional equivalent of a domestic family with a demonstrable and recognizable bond which constitutes the functional equivalent of the bonds which render the domestic family a cohesive unit. All persons of the functional equivalent of the domestic family must be cooking and living as a single nonprofit housekeeping unit. This definition shall not include any society, club, fraternity, sorority, association, lodge, coterie, organization or group of students or other group of individuals whose domestic relationship is of a transitory or seasonal nature or for an anticipated limited duration of a school term or other similar determinable period.

Deleted: <#>**Dwelling Unit.** A building or portion thereof designed exclusively for residential occupancy by one (1) family regardless of whether cooking facilities exist. ¶

Deleted: See Right-of-Way

Deleted: (1)

Deleted: two

Deleted: related

Deleted: by

Deleted: servants of the principal occupants

Deleted: ,

Deleted: with

Deleted: ,

Deleted: (2)

Deleted: and who are

(40) Farmhouse. A single family dwelling on a farm used or previously used as the residence of the farm owner.

(41) Farm Processing Facility or Local Food Production Facility. A building or buildings containing an area for processing equipment where agricultural produce is processed or packaged and prepared for wholesale and/or retail sales. In addition to processing, the building(s) may also include a retail sales area for direct sales to customers and a tasting room for the tasting of fresh or processed agricultural produce including wine. The facility also includes necessary parking, lighting and access to a public road.

(42) Feeder Lot. Also known as a "Concentrated Animal Feeding Operation (CAFO)" by the State of Michigan, a "Feeder Lot" is an area used for the concentrated feeding of large numbers of marketable meat producing animals carried on as a commercial operation rather than as part of a normal farming operation.

(43) Fence. A structural barrier, including gates when closed, constructed of wood, metal or other durable parts such as rails, boards, wire mesh, or other material designed and marketed for such use; and used to mark a boundary or to define or enclose a specific area for the purpose of protection, privacy or confinement.

(44) Fence, Temporary. A fence of temporary nature, such as a snow fence, a fence erected around construction works, or maintained pursuant to building code or other ordinances of the Township or the county on behalf of the Township.

(45) Flood Plain Area. Those areas along the Great Lakes Shore Line falling below the elevation 582.8 I.G.L.D or as otherwise defined by the U.S. Government. (583.5 I.G.L.D. - 1985)

(46) Floor Area. The sum of all gross horizontal areas of all floors (including half stories), which include:

(a) Such area of a basement when the basement is classified as a story;
(b) Such area of any elevator shafts and stairwells at each floor;
(c) Such area used for mechanical equipment (except equipment, open or enclosed, located on a roof);
(d) Such area of any interior balconies and mezzanines, but exclusive of uncovered porches, terraces, and steps.

(47) Food Processing Plant. An on-site facility of agricultural land owners within the Township used for the production, processing, and wholesaling of their value-added products, excluding retail sales unless explicitly permitted.

(48) Garage, Private. An accessory building or an accessory portion of a principal building designed or used solely for the storage of noncommercial motor vehicles owned and used by the occupants of the building to which it is accessory.

(49) Gasoline Station and Automobile Service Station. Any area of land, including any structures thereon, used or designed for the supply of gasoline, oil, or other fuel for the propulsion of vehicles. For the purpose of this Ordinance, this term shall also mean any

Deleted: (ADDED BY AMENDMENT NO 113A)

Deleted: Means a

Deleted: (ADDED BY AMENDMENT NO 139A)

Deleted: A

Deleted: which has openings of more than fifty (50%) percent of each one square yard of surface area;

Deleted: masonry,

Deleted: stone,

Deleted: (ADDED BY AMENDMENT 142)

Deleted: (ADDED BY AMENDMENT 142)

Deleted: total of areas taken on a

Deleted: plane at the main grade level of the principal building and all accessory buildings exclusive of uncovered porches, terraces and steps.

area or structure used or designed for polishing, greasing, washing, cleaning, or servicing such motor vehicles, including automobile repair and car wash.

(50) Golf Course. An area of land used for the game of golf and consisting of more than 1 golf hole.

(51) Grade, Finished. The completed surfaces of lawns, walks, and roads brought to grades as shown on official plans or designs related thereto.

(52) Grade, Natural. The elevation of the ground surface in its natural state, before manmade alteration.

(53) Guest House. A dwelling unit detached from the principal single-family dwelling , which may only be permitted on the same lot as the principal single-family dwelling in accordance with the provisions of this Ordinance.

(54) Guest Unit. A room or group of rooms occupied, arranged or designed for occupancy by 1 or more guests for compensation, such as in a Bed and Breakfast.

(55) Health Department. Grand Traverse County Health Department.

(56) Home Occupation. An accessory use of professional, service, or business character conducted within a dwelling by the family residents thereof, which is clearly secondary and incidental to the use of the dwelling for living purposes and does not change the character thereof.

(57) Hotel, Motel, Tourist Court. Commercial establishments, known to the public as hotels, motor hotels, motels or tourist courts, including resort hotels and hotels operated by membership organizations, and open to the general public, primarily engaged in providing lodging, or lodging and meals, for the general public; however, not including bed and breakfast establishments, Recreational Unit Parks, Campgrounds, or tent sites.

(58) Impervious Surface. Any surface that cannot be effectively and easily penetrated by water, thereby resulting in runoff. Examples include, but are not limited to, "lot coverage" (as defined in this Ordinance) and any material (asphalt, concrete, compacted stone and gravel, etc.) used in roads, driveways, decks, terraces, patios, porches, or sidewalks that cannot be effectively and easily penetrated by water. The definition of an impervious surface shall exclude roads, driveways, and sidewalks that are composed of materials that will allow infiltration and prevent runoff, such as permeable pavers, permeable pavement, or crushed stone or pea stone that does not bind. The definition of an impervious surface shall also exclude decks, terraces, patios, or porches that are composed of pervious materials and/or designed to allow for easy infiltration and underlain with materials that will allow infiltration and prevent runoff. Natural and artificial water bodies, including swimming pools, shall not be classified as impervious surfaces.

(59) Junk Yard. Any establishment or premises where any motor vehicle, machinery, appliance, product or merchandise, scrap metal, or other scrap materials which are

Deleted: one

Deleted: (ADDED BY AMENDMENT 91)

Deleted: one (

Deleted:)

Deleted: -

Deleted: Leelanau-Benzie District

Deleted: , sometimes referred to as Tri-County Health Department

Deleted: <#>**Highway.** Any public thoroughfare in Peninsula Township, including Federal and State roads and highways. ¶

Deleted: or

Deleted: (REVISED BY AMENDMENT 114C)

Deleted: A "junk yard" as used herein is defined to be a

Deleted: worn out or discarded

damaged, deteriorated, or that are in a condition which prevents their use for the purpose for which they were intended are bought, kept, sold and/or stored. A "Junk Yard" shall include any premises upon which 1 or more unlicensed used motor vehicles which cannot be operated under their own power are kept or stored for a period of 15 days or more.

(60) Kennel. Any lot or premises used for the sale, boarding, training, transfer, or breeding of dogs, cats, or other household pets over the age of 6 months. Kennel shall also mean the keeping of 5 or more dogs, cats or other household pets over the age of 6 months.

(61) Land Use Permit. Permit required for any change in use of land or structure in accordance with the provisions of this Ordinance.

(62) Line, Street. The dividing line between a street right-of-way and a lot.

(63) Local Food Production Facility. See "Farm Processing Facility."

(64) Lot. An area of land, which may consist of lots of record and/or parcels or parts thereof, which may consist of lots of record and/or parcels or parts thereof, on which 1 principal building and its accessories are located or intended to be located together with any open spaces required by this Ordinance. The definition of "Lot" may consist of 2 or more lots, lots of legal record, or platted lots, when contiguous to each other and when held in common ownership, for purposes of this Ordinance where the combination of lots is necessary to meet the setback or lot coverage requirements of this Ordinance. Unless otherwise provided in this Ordinance, public and private streets and road rights-of-way, and approved road easements for ingress and egress shall divide lots (including parcels and sites) for purposes of this Ordinance. While 2 or more lots separated by not more than the width of a public road right-of-way or private road easement may be combined into a single tax identification parcel, all principal and accessory buildings shall be placed on 1 lot and such lot coverage shall be calculated using the coverage and area of that 1 lot. See also "Site, Area." The definition of "lot" shall also include subdivision lots and site condominium unit lots.

(65) Lot, Depth of. The mean distance from the street line of the lot to its opposite rear line measured in the general direction of the side lines of the lot.

(66) Lot, Front of. That lot line which is (or contains) the road line of the principal road or right-of-way providing access to the lot.

(67) Lot, Line. The lines bounding a lot as herein described.

(68) Lot, Width of, Frontage. The frontage width, is measured along the front lot line and is a straight line connecting the 2 points where the front lot line intersects the 2 adjacent side lot lines.

Deleted: material
Deleted: is
Deleted: ;
Deleted: two (2)
Deleted: (
Deleted:)
Deleted: shall be deemed to be a "junk yard" within the meaning of this Ordinance
Deleted: five (
Deleted:)
Deleted: six (
Deleted:)
Deleted: The parcel
Deleted: having frontage along a street or right-of-way
Deleted: one
Deleted: Two (
Deleted:)
Deleted: parcels
Deleted: may be treated together as a single lot
Deleted:
Deleted: ;
Deleted: (REVISED BY AMENDMENT 158)
Deleted: (REVISED BY AMENDMENT 88)
Deleted: two
Deleted: two
Deleted: (ADDED BY AMENDMENT 88)

(69) Lot, Width of, Minimum. The minimum lot width shall be measured at the shortest distance between the side lot lines extending 100 feet from the front lot line. Where the front lot line is not a straight line, and curves into or away from the lot (such as a cul-de-sac or street curve), the minimum lot width shall be measured at the shortest distance between the side lot lines measured tangent to an outside curve (such as a cul-de-sac) or chord to an inside curve 100 feet from the front lot line (See *Figure 2*). In no case, however, shall the width between side lot lines at the frontage (i.e., where they intersect with the right-of-way line or road easement) be less than the required lot width except in the case of lots on the turning circle of a cul-de-sac, where the width in the front yard setback may be 80 percent of the minimum width required.

Deleted: within

Deleted: of

Deleted: (ADDED BY AMENDMENT 88)(REVISED BY AMENDMENT 107E)

Figure 2. Lot Width Measurement

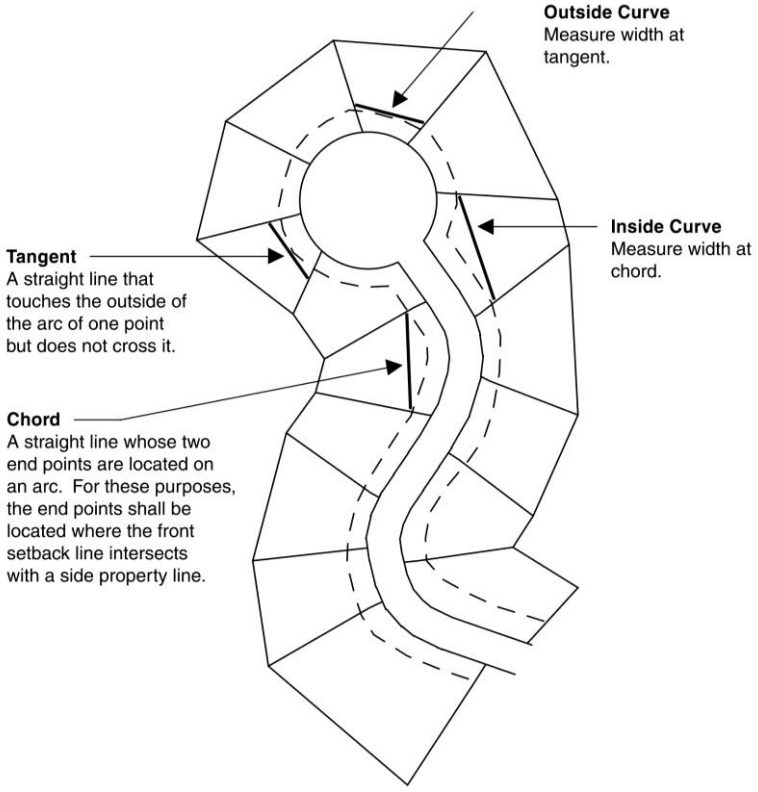

(70) Lot Coverage. The amount of a lot, stated in terms of percentage, that is covered by all buildings, and/or structures located thereon. This shall be deemed to include all buildings, roofed porches, arbors, breezeways, decks, patio roofs, but shall not be deemed to include fences, walls, or hedges used as fences, water bodies (including swimming pools), or at-grade structures such as driveways, walkways, and at-grade

patios. Lot coverage shall be measured from the drip line of the roof or from the wall or foundation if there is no projecting portion of the roof.

(71) Lot Line Types. Lot Line Types are as follows (See Figure 3 and *Figure 4*):

(a) Lot Line, Front. The line(s) separating the lot from any street right-of-way, private road or other access easement. In the case of a corner lot and double frontage lot, the front lot line shall mean that line separating said lot from that street right-of-way, private road, or other access easement which is designated as the front on the plat, approved site plan, or recorded survey and in the request for a Land Use Permit. A front lot line shall be continuous at least a sufficient length to conform with the minimum lot width requirement of the district.

(b) Lot Line, Rear. The lot line opposite and most distant from the front lot line. In the case of a triangular or otherwise irregularly shaped lot or parcel, an imaginary line at least 10 feet in length entirely within the lot or parcel, parallel to and at a maximum distance from the front lot line

(c) Lot Line, Side. Any lot line other than a front or rear lot line.

(72) Lot of Record. A lot which is part of a subdivision or site condominium, the map of which has been recorded in the Office of the Register of Deeds in Grand Traverse County or a lot described by metes and bounds, the deed or land contract to which has been recorded in the Office of the Register of Deeds in Grand Traverse County.

(73) Lot Types. Lot Types are as follows (refer to *Figure 3*):

(a) **Lot, Corner.** A lot which has at least 2 contiguous sides abutting upon a street for their full length. A lot abutting on a curved street or streets shall be considered a corner lot if straight lines drawn from the foremost points of the side lot lines to the foremost point of the lot meet at an interior angle of less than 135 degrees. A corner lot shall have 1 front lot line, from which primary access shall be taken.

(b) **Lot, Double Frontage.** An interior lot having frontage on more than 1 street or road. A double frontage lot shall have 1 front lot line, from which primary access shall be taken.

(c) **Lot, Flag.** A pre-existing nonconforming lot which uses a narrow, unbuildable strip of land that does not meet the frontage requirements of the district in which is it located, which provides access to, or legal frontage on, a public or private street.

(d) **Lot, Interior.** A lot other than a corner lot with only 1 frontage on a street or road.

Figure 3. Lot Types

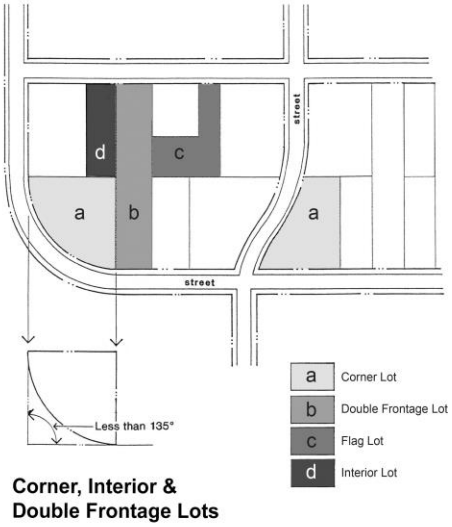

(74) Major Thoroughfare. Unless stated otherwise in the Master Plan, a Major Thoroughfare shall be an arterial or collector-distributor road, which includes M-37, Center Road, Peninsula Drive, Bluff Road, Montague Road, and East Shore Drive.

(75) Marina. A commercial boat basin or dock with facilities for berthing and servicing all types of water craft, as well as providing supplies, provisions, service and fueling facilities.

Deleted: two (

Deleted:)

Deleted: A

Commented [PS9]: These roads are referred to in the Site Condominium section as being significant roads. The Master Plan also refers to these roads as significant.

(76) Migrant Farm Laborer. Is a person employed in agricultural work of a seasonal or other temporary nature who:

(a) Has to travel from his or her permanent place of residence to do the farm work so that he/she is unable to return to his/her permanent residence within the same date;

(b) Is not employed in farm work year round by the same employer; and

(c) Does not have an ownership interest in the property.

(77) Mobile Home. A structure, transportable in one or more sections, which is built on a chassis and designed to be used as a dwelling with or without permanent foundation, when connected to the required utilities, and includes the plumbing, heating, air-conditioning, and electrical systems contained in the structure. The term mobile home shall not include pick-up campers, travel trailers, motor homes, modular homes, recreational vehicles, converted buses, tent trailers, or other transportable structures designed for temporary use.

(78) Mobile Home, Occupied. Means a mobile home which is being used for dwelling or sleeping purposes.

(79) Mobile Home Park. Means any parcel or tract of land under the control of any person, upon which 3 or more mobile homes are located on a continual, non-recreational basis and which is offered to the public for that purpose regardless of whether a charge is made therefor, together with any building, structure, enclosure, street, equipment, or facility used or intended for use incidental to the occupancy of a mobile home.

(80) Nonconforming Building, Nonconforming Structure, or Nonconforming Use. A building, structure, or use of land existing at the time of enactment of this Ordinance, and which does not conform to the regulations of the district or zone in which it is situated.

(81) Normal High Water Mark. See "Ordinary High Water Mark."

(82) Open Space. An area that is open to the sky exclusive of roads, parking lots and building envelopes.

(83) Ordinary High Water Mark. For Lake Michigan, the Ordinary High Water Mark is a point 579.8 feet above sea level (International Great Lakes Datum 1955, change for 1985 = 580.5 - add .7 to get to 1985) and 581.0 feet above sea level (United States Geological Survey Datum), or as otherwise determined by the State of Michigan or U.S. Government. For other water bodies, the Ordinary High Water Mark is the approximate location on the shore where physical markers such as vegetation indicate the ordinary high water mark.

(84) Parcel Area. See "Site, Area."

(85) Parcel Size. See "Site, Area."

Deleted: (ADDED BY AMENDMENT NO. 166A)

Commented [PS10]: The definition of "Mobile Home" has been replaced with the definition in "The Mobile Home Commission Act."

Deleted: Means a trailer coach, a trailer or a single family manufactured living unit which is transported to a site as one (1) or more modules, any of which is so constructed as to permit permanent occupancy as a dwelling or sleeping place by one (1) or more persons, and licensable as a "trailer coach" under Act No. 300 of the Public Acts of 1949, as amended, being sections 257.1 to 257.923 of the Compiled Laws of 1948, and meets the Mobile Home Construction and Safety Standards, (24 CFR part 3280) and bears a HUD label so indicating.

Deleted: trailer coach

Commented [PS11]: The definition of "Mobile Home Park" has been replaced with the definition in "The Mobile Home Commission Act."

Deleted: , Trailer Coach Park or Park

Deleted: three (

Deleted:)

Deleted: occupied trailer coaches are harbored

Deleted: or

Deleted: , or

Deleted: ,

Deleted: harboring or

Deleted: trailer coaches; except as provided by section 91 of Public Act #172 of the Public Acts of 1970

Deleted: (REVISED BY AMENDMENT 151)

Deleted: A

Deleted:

(86) Plan, Master. A statement of policy by the Township relative to the agreed-upon desirable physical pattern of future community development, consisting of a series of maps, charts, and written material that represents a sound conception of how the community should grow in order to bring about the very best community living conditions.

(87) Planned Unit Development. A land area which has both individual building sites and common property, such as a park, and which is designed and developed under 1 owner or organized group as a separate neighborhood or community unit in accordance with the Michigan Zoning Enabling Act.

(88) Principal Use. The main use to which the premises are devoted and the principal purpose for which the premises exists.

(89) Private Launching Ramp. A space or structure from which a boat may be launched for the use and benefit of the patrons of the waterfront marina or boat yard wherein said boats are berthed or docked.

(90) Public Utility. Any person, firm, corporation, municipal department or board fully authorized under Federal, State, or Municipal Regulations to furnish to the public electricity, gas, steam, communications (excluding wireless communication facilities), telegraph, transportation or water. Public utilities shall not include solar energy facilities or wind energy facilities.

(91) Recreation, Private. A recreational space or structure, or combination thereof, belonging to and/or operated by private interests for use by private individuals and/or organizations and/or the public, consisting primarily of man-made structures and/or other artificial apparatus which are necessary to form the basis for said use.

(92) Recreational Unit. Means a tent, or vehicular-type unit, primarily designed as temporary living quarters for recreational camping or travel use, which either has its own motive power or is mounted on or drawn by another vehicle which is self-powered. A tent means a collapsible shelter of canvas or other fabric stretched and sustained by poles and used for camping outdoors. Recreation unit shall include "Travel trailers", "Camping trailer", "Motor home", "Truck camper", "Slide-in-camper" and "Chassis-mount camper" as defined in Public Act 368. Public Acts of 1978, Michigan.

(93) Recreational Unit Park. See definition of "Campground."

(94) Recreational Vehicle. Includes travel trailers, pickup campers, motor homes, folding tent trailers, boats and other watercraft, boat trailers, snowmobiles, all terrain or special terrain vehicles, utility trailers, and similar equipment used for transporting recreational equipment. See *Section 7.03.*

(95) Regional Wastewater Treatment System. That system being planned as of the effective date of this Ordinance by the City of Traverse City and the 5 townships surrounding Traverse City.

Deleted: General Development

Deleted: Zoning Board

Deleted: one (

Deleted:)

Commented [PS12]: The definition of "Practical Difficulty" consists of regulations that will be moved to Section 14.104.

Deleted: ¶

<#>**Practical Difficulty.** To obtain a dimensional variance, the applicant must show practical difficulty by demonstrating all of the following:¶

¶

<#>Strict compliance with area, setbacks, frontage, height, bulk or density would unreasonably prevent the owner from using the property for any permitted purpose, or would render conformity unnecessarily burdensome;¶

¶

<#>A variance would do substantial justice to the applicant as well as to other property owners in the district, and that a lesser relaxation would not give substantial relief and be more consistent with justice to others;¶

¶

<#>The plight of the owner is due to unique circumstances of the property; and;¶

¶

<#>The problem was not self-created. (ADDED BY AMENDMENT 171A)¶

Deleted: telephone

Deleted: 171

Deleted: 1970

Deleted: (REVISED BY AMENDMENT 114A)

Deleted: five

(96) Registered Guest. Means a person or people that stay overnight and have signed a guest register.

(97) Retail Sales. The function and activity involved in the selling of goods to customers.

(98) Right-of-Way. A street, alley, or other thoroughfare or easement permanently established for passage of persons or vehicles which, if used to establish a lot front, provides adequate permanent access.

(99) Road, Access Easement. A right-of-way or commons area including a private road which provides access to a lot or parcel in lieu of access from a public road.

(100) Road, County Standards. The Standards and Specifications for Subdivision Streets as adopted by the Grand Traverse County Road Commission.

(101) Road, Cul-de-sac. A local road of short length having one end terminated by a vehicular turnaround.

(102) Road, Private. A private road approved by the Township Zoning Administrator as meeting the published standards of Peninsula Township to serve as a private road for zoning purposes, and may include approved roads in a Condominium Project, but does not include alleys, easements, driveways, or the like unless they have been approved by the Township as private roads.

(103) Road, Highway. Any public thoroughfare in Peninsula Township, including Federal and State roads and highways.

(104) Road, Local Access. Local access roads provide access to homes, farms and other low intensity land uses. Traffic desires are local in nature and these roads do not require trip continuity for an extended length.

(105) Road, Local. A public or private road designated a local road by the Grand Traverse County Road Commission which is intended primarily for access to abutting properties.

(106) Road, Marginal Access. A local road which is parallel and adjacent to arterial roads and which provides access to abutting properties and protection from through traffic and not carrying through traffic.

(107) Road, Primary. Those roads of considerable continuity which are designated as primary roads by the Grand Traverse County Road Commission.

(108) Road, Private Subdivision. A private road in a subdivision approved by the Grand Traverse County Road Commission and/or Peninsula Township pursuant to the Plat Act (Act 288, P.A. of 1967 as amended).

(109) Road, Sight Distance. The unobstructed vision on a horizontal plane along a road centerline from a driver-eye height of 3.75 feet and an object height of 6 inches, unless otherwise defined by the Road Commission or Township Engineer as applicable.

Deleted: (ADDED BY AMENDMENT 114B)

Deleted: by

Deleted: , Easement Access

Deleted: frontage

Deleted: or private

Deleted: (ADDED BY AMENDMENT 88)

Deleted: (ADDED BY AMENDMENT 88)

Deleted: (ADDED BY AMENDMENT 88)

Deleted: Frontage

Deleted: lot frontage

Deleted: frontage

Deleted: (ADDED BY AMENDMENT 88)

Deleted: A right-of-way along with related improvements which provides for vehicular and pedestrian access to abutting properties

Deleted: (ADDED BY AMENDMENT 88)

Deleted: (ADDED BY AMENDMENT 88)

Deleted: (ADDED BY AMENDMENT 88)

Deleted: (ADDED BY AMENDMENT 88)

Deleted: (ADDED BY AMENDMENT 88)

Deleted: (ADDED BY AMENDMENT 88)

Deleted: <#>**Road, State Highway.** State or federal numbered highway. (ADDED BY AMENDMENT 88)¶
¶

Deleted: (ADDED BY AMENDMENT 88)

(110) Roadside Stand. A is a structure or display area used for displaying and selling regionally grown fresh and/or processed farm, produce and products. Such farm stands must be operated as an accessory use of a farm.

(111) Self Service Storage Facility. A structure or structures containing separate, individual, and private storage spaces of varying sizes leased or rented on individual leases for varying periods of time.

(112) Setback. The minimum horizontal distance between the lot line (or other line as applicable) and the structure, as required herein:

(a) Setback, Front. The minimum distance, extending the full lot width, between the structure and the front lot line.

(b) Setback, Rear. The minimum distance, extending the full lot width, between the structure and the rear lot line or between the structure and the easement line of the alley, if there be any alley.

(c) Setback, Side. The minimum required distance, extending from the front setback to the rear setback, between the structure and the side lot line.

(d) Setback, Waterfront. The minimum required distance, extending the full width of the lot, between the structure and the Ordinary High Water Mark of a water body.

(113) Service Institution. A commercial establishment which performs services on the premises within a completely enclosed building including, but not limited to, clothing repair shops, barber and beauty shops, photographic studios, and drop-off/pick-up dry cleaners provided no treatment of clothing or other material occurs on the property.

(114) Shared Waterfront Ownership. Property with frontage on Grand Traverse Bay that is owned by more than one family through deed, land contract, non-exclusive easement or other form of ownership.

(115) Site. See "Site, Area."

(116) Site, Area (includes the terms: "Site", "Site Area," "Lot," "Parcel Size" and "Parcel Area"). The total area within the lot lines including road and street right-of-ways, provided the property legal description includes such right-of-way.

(117) Site Condominium Lot. A parcel of land meeting the depth-to-width ratios and minimum lot area requirements of a lot within the zoning district in which it is located as part of a condominium development under Michigan's Condominium Act, being Public Act 59 of 1978, as amended. A "Site Condominium Lot" shall be the same as a "Site Condominium Unit."

(118) Story, Half. The uppermost story lying under a roof, the usable floor area of which does not exceed one-half of the floor area of the uppermost full story.

Deleted: "roadside stand"

Deleted: (Amendment 86A)

Deleted: (REVISED BY AMENDMENT 109A)

Deleted: property

Deleted: excluding

Deleted: except as follows: Site Area, Parcel Area, and Parcel Size shall include road or street rights-of-way

Deleted: ; andhe property is being developed as a Planned Unit Development

Deleted: (REVISED BY AMENDMENT 158)

Commented [PS13]: Because the height limits are 2.5 stories, a definition of "half story" is required.

(119) Story, Height of. The vertical distance from the top surface of one floor to the top surface of the next above. The height of the top-most story is the distance from the top surface of the floor to the top surface of the ceiling joists.

(120) Street. A road or similar thoroughfare that provides direct access to individual abutting properties.

(121) Street Line. See "Right-of-Way."

(122) Structure. Anything constructed or erected, the use of which requires a temporary or permanent location on the ground or is attached to something having a permanent location in, on or below the ground. Structures shall include but not be limited to buildings, manufactured homes, decks, patios, sidewalks, driveways, walls (including seawalls), fences, poles, antennae, swimming pools, billboards, signs, and towers, but not including: (a) access steps required to negotiate changes in site elevation; and (b) landscape mounds.

(123) Tasting Room. A room in conjunction with a licensed winery premises, including a remote wine tasting room, where the following takes place; a) tasting of fresh and/or processed agricultural produce such as wine, fruit wines, and non-alcoholic fruit juices; b) retail sales of winery products by the bottle for off-premises consumption; and c) sales of wine by the glass for on-premises consumption.

(124) Tenant House. A house that is part of farm property for full-time farm employees associated with principal use and subject to the same height and setback requirements as the principal dwelling.

(125) Township Board. Peninsula Township Board.

(126) Use. The purpose for which land or a building is arranged, designed, or intended, or for which land or a building may be occupied.

(127) Wall. A structural barrier, including gates when closed, constructed of masonry or other durable parts such as stone or other material designed and marketed for such use; and used to mark a boundary or to define or enclose a specific area for the purpose of protection, privacy, or confinement.

(128) Wall, Retaining Wall. A vertically sloped wall constructed of concrete, durable wood, masonry, or other material acceptable to the Township, designed and constructed to resist the lateral displacement of soil.

(129) Wall, Seawall. A vertically sloped wall constructed to break the force of waves and retain soil for the purpose of shoreline protection.

(130) WECS. The approved form of abbreviation of "wind energy conversion system". WECS shall mean a combination of:

Deleted: P

Deleted: The legal line of demarcation between a street and abutting land

Commented [PS14]: We recommend classifying all fences as structures; however, in the fence regulations, we will recommend exempting temporary fences, fences under a certain height, and agricultural fences from the requirement to obtain a fence permit.

Deleted: A structure is any production or piece of material artificially built up or composed of parts joined together in some definite manner; any construction, including dwellings, garages, building, mobile homes, signs and sign boards, towers, poles, antennae, landfill, sea walls, weirs, jetties, swimming pools, stand pipes; fences over four feet in height above final grade and earth sheltering for earth-sheltered structures or other like objects, but not including: (a) a temporary fence: (b) agricultural fences that are used for general farming and horticultural uses, field crop and fruit farming, raising and keeping of small animals, and raising and keeping of livestock; (c) access steps required to negotiate changes in site elevation; (d) landscape mounds; and (e) sidewalks, drives, and paved areas which do not protrude above the finished site grade. (REVISED BY AMENDMENT 152)

Deleted: (ADDED BY AMENDMENT NO 139A)(REVISED BY AMENDMENT NO 181)

Deleted: <#>**Trailer Coach.** Mobile Home as defined herein.¶ ¶

Deleted: structure

Deleted: which has openings of fifty (50%) percent or less of each one square yard of surface area.

Commented [PS15]: This is a new definition that is the same as the definition of "Seawall" in Act 451 of 1994.

(a) A surface area, either variable or fixed, for utilizing the wind for electrical powers; and

(b) A shaft, gearing, belt, or coupling utilized to convert the rotation of the surface area into a form suitable for driving a generator, alternator, or other electricity producing device; and

(c) The generator, alternator, or other device to convert the mechanical energy of the surface area into electrical energy; and

(d) The tower, pylon, or other structure upon which any, all, or some combination of the above are mounted.

Tower Height.

(i) **Horizontal Axis Wind Turbine Rotors.** The distance between the ground and the highest point of the WECS, as measured from the ground, plus the length by which the rotor blade on a horizontally mounted WECS exceeds the structure which supports the rotor and blades;

(ii) **Vertical Axis Wind Turbine.** The distance between the ground and the highest point of the WECS.

Survival Wind Speed. The maximum wind speed, as designated by the WECS manufacturer, at which a WECS, in unattended operation (not necessarily producing power) is designed to survive without damage to any structural equipment or loss of the ability to function normally.

Interconnected WECS. A WECS which is electrically connected to the local electrical power utility system and could feed power back into the local electrical power utility system.

(131) Wine. Means the product made by the normal alcoholic fermentation of the juice of sound, ripe grapes, or any other fruit with the usual cellar treatment, and containing not more than 21% of alcohol by volume, including fermented fruit juices other than grapes and mixed wine drinks.

(132) Winery, Chateau. A state licensed facility whereat (1) commercial fruit production is maintained, juice is processed into wine, stored in bulk, packaged, and sold at retail or wholesale to the public with or without the use of a wine tasting facility and (2) a limited number of guest rooms with meals are offered to the public.

(133) Winery. A state licensed facility where agricultural fruit production is maintained, juice is processed into wine, stored in bulk, packaged, and sold at retail or wholesale to the public with or without the use of a wine tasting facility. The site and buildings are used principally for the production of wine.

Deleted: (ADDED BY AMENDMENT NO 139A)(REVISED BY AMENDMENT

(134) Yard. An open space on the same lot with a building, unoccupied and unobstructed from the ground upward, except as otherwise provided herein. The measurement of a yard shall be construed as the minimum horizontal distance between the lot line and the building line.

(135) Yard, Front. A yard extending the full width of the lot, the depth of which is the minimum horizontal distance between the front lot line and the nearest line of the main building (see *Figure 4* below).

(136) Yard, Rear. A yard extending the full width of the lot, the depth of which is the minimum horizontal distance between the rear line of the lot and the rear line of the main building. The depth of the rear yard shall be measured between the rear line of the lot, or the center line of the alley, if there be any alley, and the rear line of the building (see *Figure 4* below).

Deleted: n

Deleted: open space on the same lot with a main building unoccupied except as herein permitted,

Deleted: and situated

Deleted: projected to the sidelines of the lot

(137) Yard, Side. A yard between the building and the side line of the lot and extending from the front yard to the rear yard. Any yard not defined as a front yard or rear yard shall be deemed a side line (see *Figure 4* below).

Deleted: n

Deleted: open, unoccupied space on the same lot with the building, situated

Deleted: lot line

Deleted: line

Figure 4. Yard Terms

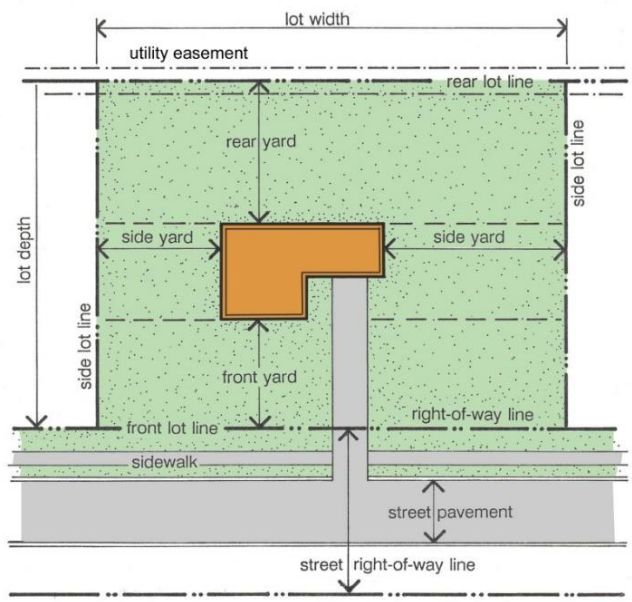

(138) Zoning Permit. See "Land Use Permit".

Commented [PS16]: Because "Land Use Permit" and "Zoning Permit" mean exactly the same, it is best to simply refer to "Land Use Permit" in the definition of "Zoning Permit."

Deleted: Permit required for any change in use of land, or structure in accordance with the provisions of this Ordinance.

Article 3 Zoning Districts and Map

Section 3.01 Districts Established (currently Section 6.1.1)

For the purpose of this Ordinance the Township of Peninsula is hereby divided into the following districts:

(A) A-1: Agricultural
(B) R-1A: Rural and Hillside Residential
(C) R-1B: Coastal Zone Residential
(D) R-1C: Suburban Residential
(E) R-1D: Community Residential
(F) C-1: Commercial

Commented [PS17]: The Planned Unit Developments are not districts; rather, they are a set of regulations applicable to the subject property while the underlying zoning district is maintained. Therefore, because the underlying zoning district is maintained and there is no separate PUD district. For sites with a PUD approval, they can be indicated as such on the Zoning Map without calling it a separate district.

Deleted: <#>R-1A: Planned Unit Development¶

Deleted: <#>R-1B: Planned Unit Development¶

Deleted: <#>R-1C: Planned Unit Development¶

Deleted: <#>R-1D: Planned Unit Development¶

Section 3.02 Zoning Districts Map (currently Section 6.1.2)

The boundaries of the districts are hereby defined and established as shown on a map entitled "Zoning District Map of Peninsula Township, Grand Traverse County, Michigan" which accompanies this Ordinance and which map with all explanatory matter thereon is hereby made a part of this Ordinance.

The official Zoning Map shall be identified by the signature of the Township Supervisor, attested by the Township Clerk and bearing the following words: "This is to certify that this is the official Zoning Map, referred to in *Section 3.02* of the Peninsula Township Zoning Ordinance adopted on June 5, 1972." If in accordance with the provisions of this Ordinance and of the applicable statute, amendments effecting changes are made in district boundaries or other matter portrayed on the official Zoning Map, such changes shall not be considered final, and land use permits shall not be issued until changes have been made on the official Zoning Map. Such Map changes shall be made after the effective date of the Ordinance amendment. Each Map change shall indicate the zoning amendment number on the Map. The official Zoning Map shall be maintained and kept up to date by the Township.

Deleted: (consisting of 24 pages)

Commented [PS18]: The adopted date will be changed in this paragraph upon adoption of the Zoning Ordinance.

Deleted: Article VI, Section 6.1.2

Deleted: zoning

Deleted: within five (5) normal working days

Deleted: Two (2) copies of t

Deleted: , one (1) with the Township Clerk and one (1) in the Zoning Administrator's office

Section 3.03 Interpretation of District Boundaries (currently Section 6.1.3)

Where uncertainty exists with respect to the boundaries of any of the districts indicated on the Zoning Map, the following rules shall apply:

(A) **Streets, Roads, and Highways.** Boundaries indicated as approximately following the streets, roads, or highways shall be considered to be such boundaries.

(B) **Lot Lines.** Boundaries indicated as approximately following lot lines shall be construed as following such lot lines.

(C) **Township Boundary Lines.** Boundaries indicated as approximately following Township boundary lines shall be construed as following such Township boundary lines.

(D) **Parallel to Streets, Roads, or Highways.** Boundaries indicated as approximately parallel to the center lines of streets, roads, or highways shall be construed as being parallel thereto and at

such distance therefrom as indicated on the official Zoning Map. If no distance is given, such dimension shall be determined by the use of the scale shown on the official Zoning Map.

(E) **Water Bodies.** Boundaries following the shoreline of a stream, lake, or other body of water shall be construed to follow such shorelines; on the Great Lakes, the boundaries shall be the ordinary high water mark.

(F) **Zoning of Filled or Accreted Land.** Whenever fill is placed in any lake, river, or stream or land is created by accretion, the land thus created shall automatically and without further governmental action thenceforth acquire and be subjected to the same zoning regulations as are applicable to lands to which the same shall attach or be adjacent, and the same shall be used for the same purposes as are permitted under this ordinance for such adjoining lands.

(G) **Unresolved District Boundaries.** Where the application of the aforesaid rules leaves a reasonable doubt as to the boundaries between 2 districts, the regulations of the more restrictive district shall govern the entire parcel in question, unless otherwise determined by the Board of Appeals.

Section 3.04 Scope of Regulations (currently Section 6.1.4(1))

No building or structure, or part thereof, shall be erected, moved, constructed, or altered, and no new use or change in use shall be made unless in conformity with the provision of this Ordinance and with the regulations specified for the district in which it is located.

The regulations applying to each district include specific limitations on the use of land and structure, height and bulk of structures, density of population, lot area, yard dimensions, and area of lot that can be covered by each structure.

Section 3.05 Categories within Zoning Districts (currently Section 6.1.5 and Section 8.7.2)

In order to insure all possible benefits and protection for the Zone Districts in this Ordinance, the land uses have been classified into 2 categories:

(A) **Uses Permitted By RIGHT.** The primary uses and structures specified for which the Zone District has been established, subject to applicant use and development standards of this Ordinance.

(B) **Uses Permitted by SPECIAL USE PERMIT.** Uses and structures which have been generally accepted as reasonably compatible with the primary uses and structures within the Zone District, but could present potential injurious effects upon the primary uses and structures within the Zone District, therefore require special consideration in relation to the welfare of adjacent properties and to the community as a whole. All such uses proposed shall be approved in accordance with the provisions of this Ordinance, including *Article 6*.

Deleted: , elevation 579.8 feet above sea level, International Great Lakes Datum of 1955

Deleted: two (

Deleted:)

Deleted: three (3

Deleted:)

Commented [PS19]: Uses permitted "Under Special Conditions" is deleted because these uses are either Permitted Uses (with applicable use and development standards) or Special Uses.

Deleted: **<#>Uses permitted UNDER SPECIAL CONDITIONS. Uses and structures compatible with the primary uses and structures permitted within the Zone District but subject to the special conditions specified with the Zone District.¶**
<#>¶

Commented [PS20]: The list of individual special land uses has been incorporated into the land use tables in this article.

Deleted: Article VIII of

Deleted: <#>¶
<#>Special Uses that May be Permitted. The following land and structure uses may be permitted within the particular zone districts cited, PROVIDED that requirements specified in Section 8.1 and the applicable specified conditions established herein can be complied with:¶
<#>¶
<#>Incinerators and sanitary fills within the A-1 agricultural zone district.¶
<#>Sewage treatment and disposal installations within any zone district.¶
<#>Special Open Space uses, such as public beaches, bath houses, recreational camps, and other open space uses operated for profit within any agricultural zone district.¶
<#>Golf Courses and Country Clubs.¶
<#>Airports or airfields, within the agricultural zone district.¶
<#>Marinas in C-1 District.¶
<#>Warehousing and light industrial in the Agricultural District.¶
<#>Wind Energy Conversion Systems.¶
<#>Bed and Breakfast Establishments within the residential and agricultural zone districts.¶
<#>Adult Foster Care Facilities in the Agricultural District:¶
<#>Winery, Chateau in the Agricultural District.¶
<#>Wireless Telecommunication Antenna Towers¶
<#>Remote Winery Tasting Rooms within the Agricultural District A-1.¶
Page Break

Section 3.06 Permitted Uses by District (NEW Table of Land Uses, which includes applicable parts of Sections 6.2 – 6.7)

Use	A-1	R-1A	R-1B	R-1C	R-1D	C-1	Development Standard
Accessory Buildings	P	P	P	P	P	P	*Section 7.13*
Adult Foster Care, Family Home	P	P	P	P	P		
Adult Foster Care, Small Group Home	SU						*Section 6.01*
Agricultural Labor Camp, Less than 5 migrant workers	P						
Agricultural Labor Camp, Licensed	P						
Airports and Airfields	SU						
Barn Storage	P						*Section 6.02*
Bed and Breakfast Establishments	SU	SU	SU	SU	SU		*Section 6.03*
Boat Livery						SU	
Cemeteries	P						
Child Care, Family Home	P	P	P	P	P		
Child Care, Group Home	SU	SU	SU	SU	SU		*Section 6.05*
Child Care Centers						SU	*Section 6.04*
Drive-Through Uses						SU	*Section 6.06*
Dwelling, Single-Family	P	P	P	P	P		*Section 6.07*
Dwelling, Two Family	P		P	P	P		
Farm Supply and Implement Dealers						SU	
Field crop and fruit farming, truck gardening, horticulture, aviaries, hatcheries, apiaries, greenhouses and nurseries (no retail sales), and similar agricultural enterprises.	P						
Food Processing Plants	P						*Section 6.10*
Game or hunting preserves operated for profit	SU						
Gasoline Station and Automobile Service Stations						SU	*Section 6.11*
General Farming and Horticultural Uses	P	P	P	P	P		*Section 6.09*
Golf Courses and Country Clubs	SU		SU	SU	SU		*Section 6.12*
Greenhouses and Nurseries (Retail Sales)	SU						*Section 6.13*
Guest Houses		P	P	P	P		*Section 6.14*
Home Occupations	P	P	P	P	P		*Section 6.15*
Hotels, motels, and tourist courts						SU	*Section 6.16*
Incinerators and sanitary landfills	SU						*Section 6.17*
Indoor Recreation						SU	*Section 6.19*
Institutional Structures and Uses	SU	SU	SU	SU	SU		*Section 6.18* *Section 6.04*
Junk Yards						SU	*Section 6.20*
Keeping of Domestic Pets	P	P	P	P	P		*Section 6.21*
Kennels	SU						*Section 6.22*
Local Food Production Facility	P						*Section 6.23*
Marinas						SU	*Section 6.24*
Mining or removal of top soil	P						*Section 8.05*
Mobile Homes (not in a Mobile Home Park)	P	SU	SU	SU	SU		*Section 6.25*

Commented [PS21]: The Michigan Zoning Enabling Act requires Adult Foster Care Family Homes (i.e., up to 6 residents) must be a permitted use in all residential zones.

Commented [PS22]: The Adult Foster Care Facility Licensing Act classifies different types of adult foster care facilities. The adult foster care facility closest to the type currently permitted in the A-1 district via special use approval is an "Adult Foster Care, Small Group Home" which permits up to 12 residents.

Deleted: Facilities

Commented [PS23]: The Michigan Zoning Enabling Act requires Family Child Care Homes (i.e., up to 6 children) must be a permitted use in all residential zones.

Commented [PS24]: The Michigan Zoning Enabling Act requires a Group Child Care Home (i.e., up to 12 children) to be a special land use, subject to certain conditions, which are listed in the corresponding section in Article 6.

Commented [PS25]: Currently, we propose to make this use permitted by right.

Deleted: SU

Article 3: Zoning Districts and Map
Section 3.06: Permitted Uses by District

Use	A-1	R-1A	R-1B	R-1C	R-1D	C-1	Development Standard
Mobile Home Park Developments					SU		*Section 6.26*
Off-street Parking Lots						SU	
Retail Sales						SU	
Planned Unit Development	SU	SU	SU	SU	SU		*Section 5.01* *Section 6.08*
Professional Offices						SU	
Public areas, Public Parks, and Public Recreation	P	P	P	P	P		*Section 6.28*
Public and private conservation areas	P	P	P	P	P	P	*Section 6.27*
Public buildings and public service installations	SU						
Raising and keeping of small animals	P						
Raising, keeping, and boarding of livestock	P						
Raising of Fur Bearing Animals for Profit	SU						
Recreational Unit Park and Campground	SU	P	P	P	P	P	*Section 6.29*
Recreational Unit Sales						SU	
Remote Winery Tasting Room	SU						*Section 6.30*
Rental of Non-owner Occupied Dwelling	P	P	P	P	P		*Section 6.31*
Restaurants and Taverns						SU	
Riding stables and livestock auction yards	SU						
Roadside stands	P						*Section 6.32*
Sawmills	SU						
Self Service Storage Facility						SU	*Section 6.33*
Service Institutions						SU	
Sewage Treatment and Disposal Installations	SU	SU	SU	SU	SU	SU	*Section 6.34*
Special Open Space Uses, including public beaches, bath houses, recreational camps, and other open space uses operated for profit	SU	SU	SU	SU	SU		*Section 6.35*
Storage for agricultural products	SU						
Tenant House	P						*Section 6.36*
Temporary Buildings		P	P	P	P		
Utilities						SU	
Veterinary Hospitals and Clinics	SU						
Warehousing of Products Sold at Retail on the Premises						SU	
Warehousing and Light Industrial	SU						*Section 6.37*
Wind Energy Conversion Systems (WECS)	SU	SU	SU	SU	SU	SU	*Section 6.40*
Winery, Use by Right	P						*Section 6.38*
Winery-Chateau	SU						*Section 6.39*
Wireless Telecommunication Towers	SU					SU	*Section 6.41*

P = Uses Permitted by Right
SU = Uses Permitted by Special Use Permit

Deleted: Other Similar

Deleted: Uses

Commented [PS26]: Although this is currently only permitted in residential districts, many similarly situated parcels in the A-1 district may want the same use. Please note that this use excludes lodging uses, such as Bed and Breakfasts.

Deleted: Storage of Trailer Units

Deleted: P

Deleted: P

Deleted: P

Deleted: P

Commented [PS27]: "Farm Processing Facilities" are proposed to be called "Winery, Use by Right." See Article 6 for proposed regulation changes.

Deleted: Farm Processing Facility

Deleted: SU

Section 3.07 A-1, Agricultural District (currently Section 6.7)

(A) Intent and Purpose (currently Section 6.7.1)
This District is intended to recognize the unique ecological character of the Peninsula and to preserve, enhance, and stabilizing existing areas within the Township which are presently being used predominately for farming purposes, yet recognize that there are lands within the district which are not suited to agriculture, therefore allowing other limited uses which are deemed to be compatible with agricultural and open space uses.

(B) Uses Permitted by Right (currently Sections 6.7.2)	(C) Uses Permitted by Special Use Permit (currently Section 6.7.3)
• Accessory buildings • Adult Foster Care, Family Home • Agricultural Labor Camp, Less than 5 Migrant Workers • Barn storage • Cemeteries • Child Care, Family Home • Field crop and fruit farming, truck gardening, horticulture, aviaries, hatcheries, apiaries, greenhouses and nurseries (no retail sales), and similar agricultural enterprises. • General Farming and Horticultural Uses • Home occupations • Keeping of pets • Licensed Agricultural Labor Camp, Licensed • Local Food Production Facility • Mining or removal of top soil • Mobile homes (not in a Mobile Home Park) • Public areas, public parks, and public recreation • Public and private conservation areas • Raising and keeping of small animals • Raising, keeping, and boarding of livestock • Rental of Non-Owner Occupied Dwelling • Roadside stands • Single-family dwellings • Tenant house • Two-family dwellings • Winery, Use by Right	• Adult Foster Care, Small Group Home • Adult foster care facilities • Airports and airfields • Bed and Breakfast establishments • Child Care, Group Home • Food processing plants • Game or hunting preserves operated for profit • Golf courses and country clubs • Greenhouses and nurseries (retail sales) • Incinerators and sanitary landfills • Institutional structures • Planned Unit Developments • Public buildings and public service installations • Raising of fur bearing animals • Recreational Unit Park and Campgrounds • Remote Winery Tasting Rooms • Riding stables and livestock auction yards • Sawmills • Sewage Treatment and Disposal Installations • Special Open Space uses, such as public beaches, bath houses, recreational camps, and other open space uses operated for profit • Storage for agricultural products • Veterinary hospitals, clinics, and kennels • Warehousing and light industrial • Wind Energy Conversion Systems (WECS) • Winery-Chateau • Wireless Telecommunication Towers

The above list is a summary of uses permitted by right or special land use approval in the district, subject to Section 3.06.

Deleted: Family day care and group day care homes

Deleted: Farm Processing Facility

Deleted: *Section 3.06*

(D) Dimension Regulations (currently Section 6.7.4 and Section 6.8)			
Lot Standards		***Minimum Setbacks***	
Min. Lot Area (sq. ft.)	5 acres	*Front Yard*	35 feet
Min. Lot Width (ft.)	330 feet	*Side Yard*	50 feet
Max. Lot Coverage (%)	n/a	*Rear Yard*	50 feet
Max. Building Height (ft.)	35 feet	*Ordinary High Water Mark*	60 feet
Max. Building Height (stories)	2.5 stories		
Min. Elevational Width of a Principal Structure	n/a		

Area and Bulk Requirements are subject to Article 4 "Schedule of Regulations" limiting the height and bulk of buildings, the minimum size of lot permitted, and providing minimum yard setback requirements.

Section 3.08 R-1A, Rural and Hillside Residential District (currently Section 6.2)

(A) Intent and Purpose (currently Section 6.2.1)
This section establishes the R-1A Rural and Hillside Residential District to set standards for the continued development of: (1) rural areas suited to very low density residential development; (2) fragile hillside areas; and (3) interface areas between more intensive residential uses and agricultural land uses. This district includes existing low density residential developments as well as areas within which such development appears both likely and desirable.

(B) Uses Permitted by Right (currently Sections 6.2.2 and 6.2.3)	(C) Uses Permitted by Special Use Permit (currently Section 6.2.4)
• Accessory Buildings	• Bed and breakfast establishments
• Adult Foster Care, Family Home	• Child Care, Group Home
• Child Care, Family Home	• Institutional structures and uses
• General Farming and Horticultural Uses	• Mobile homes (not in a Mobile Home Park)
• Guest Houses	• Planned Unit Developments
• Home occupations	• Sewage Treatment and Disposal Installations
• Keeping of Domestic Pets	• Special Open Space Uses, including public beaches, bath houses, recreational camps, and other open space uses operated for profit
• Public Areas, Public Parks, and Public Recreation	• Wind Energy Conversion Systems (WECS)
• Rental of Non-owner Occupied Dwelling	
• Single Family Dwellings	
•	
• Temporary Buildings	

The above list is a summary of uses permitted by right or special land use approval in the district, subject to Section 3.06.

Deleted: <#>Boat Hoists and Docks¶
Family Day Care Homes and Group Day Care Homes

Deleted: <#>Decks and Storage¶

Deleted: Storage of Trailer Units

(D) Dimension Regulations (currently Section 6.2.7 and Section 6.8)			
Lot Standards		***Minimum Setbacks***	
Min. Lot Area	1 acre	*Front Yard*	30 feet
Min. Lot Width (ft.)	150 feet	*Side Yard*	15 feet
Max. Lot Coverage (%)	15 percent	*Rear Yard*	30 feet
Max. Building Height (ft.)	35 feet	*Ordinary High Water Mark*	60 feet
Max. Building Height (stories)	2.5 stories		
Min. Elevational Width of a Principal Structure	24 feet		

Area and bulk requirements shall be subject to the provisions of Article 4 "Schedule of Regulations" limiting the height and bulk of buildings, the minimum size of lot permitted by land use, the maximum density permitted, and providing minimum yard setback requirements.

Section 3.09 R-1B, Coastal Zone Residential District (currently Section 6.3)

(A) Intent and Purpose (currently Section 6.3.1)
This section establishes the R-1B Coastal Zone Residential District to set standards for the development of residential properties of a semi-rural character along lake shore drives and in areas of high scenic value where more intensive development would deteriorate the Peninsula environment, and less intensive development is not essential to maintenance of the established environment.

(B) Uses Permitted by Right (currently Section 6.3.2)	(C) Uses Permitted by Special Use Permit (currently Section 6.3.3)
• Accessory Buildings	• Bed and breakfast establishments
• Adult Foster Care, Family Home	• Child Care, Group Home
• Child Care, Family Home	• Golf courses and country clubs
• General Farming and Horticultural Uses	• Institutional structures and uses
• Guest Houses	• Mobile homes (Not in a Mobile Home Park)
• Home occupations	• Planned Unit Developments
• Keeping of Domestic Pets	• Sewage Treatment and Disposal Installations
• Public Areas, Public Parks, and Public Recreation	• Special Open Space Uses, including public beaches, bath houses, recreational camps, and other open space uses operated for profit
• Rental of Non-owner Occupied Dwelling	• Wind Energy Conversion Systems (WECS)
• Single Family Dwellings	
• Temporary Buildings	
• Two Family Dwellings	

The above list is a summary of uses permitted by right or special land use approval in the district, subject to Section 3.06.

Deleted: <#>Boat Hoists and Docks¶
Family Day Care Homes and Group Day Care Homes

Deleted: <#>Decks and Storage¶

Deleted: <#>Storage of Trailer Units¶

(D) Dimension Regulations (currently Section 6.3.4 and Section 6.8)			
Lot Standards		***Minimum Setbacks***	
Min. Lot Area (sq. ft.)	25,000 sq. ft.	*Front Yard*	30 feet
Min. Lot Width (ft.)	100 feet	*Side Yard*	15 feet
Max. Lot Coverage (%)	15 percent	*Rear Yard*	30 feet
Max. Building Height (ft.)	35 feet	*Ordinary High Water Mark*	60 feet
Max. Building Height (stories)	2.5 stories		
Min. Elevational Width of a Principal Structure	24 feet		

Area and bulk requirements shall be subject to Article 4 "Schedule of Regulations" limiting the height and bulk of buildings, the minimum size of lot permitted by land use, the maximum density permitted, and providing minimum yard setback requirements.

Section 3.10 R-1C, Suburban Residential Development District (currently Section 6.4)

(A) Intent and Purpose (currently Section 6.4.1)
This section establishes the R-1C Suburban Residential District to encourage medium density residential development associated with proximate areas of Traverse City. Such development shall fall within the logical service pattern of the Regional Wastewater Treatment System, whether or not serviced by that system.

(B) Uses Permitted by Right (currently Section 6.4.2)	(C) Uses Permitted by Special Use Permit (NEW SECTION)
• Accessory Buildings	• Bed and breakfast establishments
• Adult Foster Care, Family Home	• Child Care, Group Home
• Child Care, Family Home	• Institutional structures and uses
•	• Golf courses and country clubs
• General Farming and Horticultural Uses	• Mobile homes (Not in a Mobile Home Park)
• Guest Houses	• Planned Unit Developments
• Home occupations	• Sewage Treatment and Disposal Installations
• Keeping of Domestic Pets	• Special Open Space Uses, including public beaches, bath houses, recreational camps, and other open space uses operated for profit
• Public Areas, Public Parks, and Public Recreation	• Wind Energy Conversion Systems (WECS)
• Rental of Non-owner Occupied Dwelling	
• Single Family Dwellings	
• Temporary Buildings	
• Two Family Dwellings	

The above list is a summary of uses permitted by right or special land use approval in the district, subject to Section 3.06.

Deleted: <#>Boat Hoists and Docks¶
Family Day Care Homes and Group Day Care Homes

Deleted: Decks and Storage

Deleted: <#>Storage of Trailer Units¶

(D) Dimension Regulations (currently Section 6.4.3 and Section 6.8)			
Lot Standards		***Minimum Setbacks***	
Min. Lot Area (sq. ft.)	20,000 sq. ft.	*Front Yard*	25 feet
Min. Lot Width (ft.)	100 feet	*Side Yard*	15 feet
Max. Lot Coverage (%)	25 percent	*Rear Yard*	30 feet
Max. Building Height (ft.)	35 feet	*Ordinary High Water Mark*	60 feet
Max. Building Height (stories)	2.5 stories		
Normal High Water Mark	60		
Min. Elevational Width of a Principal Structure	24 feet		

Area and bulk requirements shall be subject to Article 4 "Schedule of Regulations" limiting the height and bulk of buildings, the minimum size of lot permitted by land use, the maximum density permitted, and providing minimum yard setback requirements.

Section 3.11 R-1D, Community Residential District (currently Section 6.5)

(A) Intent and Purpose (currently Section 6.5.1)
This section establishes the R-1D Community Residential District to encourage moderately high density development where community services such as fire protection, schools, commercial development, community parks and services are available.

(B) Uses Permitted by Right (currently Section 6.5.2)	(C) Uses Permitted by Special Use Permit (currently Section 6.5.3)
• Accessory Buildings	• Bed and breakfast establishments
• Adult Foster Care, Family Home	• Child Care, Group Home
• Child Care, Family Home	• Golf courses and country clubs
• General Farming and Horticultural Uses	• Institutional structures and uses
• Guest Houses	• Mobile homes (Not in a Mobile Home Park)
• Home occupations	• Mobile Home Park Developments
• Keeping of Domestic Pets	• Planned Unit Developments
• Public Areas, Public Parks, and Public Recreation	• Sewage Treatment and Disposal Installations
• Rental of Non-owner Occupied Dwelling	• Special Open Space Uses, including public beaches, bath houses, recreational camps, and other open space uses operated for profit
• Single Family Dwellings	
• Temporary Buildings	
• Two Family Dwellings	• Wind Energy Conversion Systems (WECS)

The above list is a summary of uses permitted by right or special land use approval in the district, subject to Section 3.06.

Deleted: <#>Boat Hoists and Docks¶
Family Day Care Homes and Group Day Care Homes

Deleted: <#>Decks and Storage¶

Deleted: <#>Storage of Trailer Units¶

(D) Dimension Regulations (currently Section 6.5.4 and Section 6.8)			
Lot Standards		***Minimum Setbacks***	
Min. Lot Area (sq. ft.)	15,000 sq. ft.	*Front Yard*	25 feet
Min. Lot Width (ft.)	100 feet	*Side Yard*	15 feet
Max. Lot Coverage (%)	30 percent	*Rear Yard*	30 feet
Max. Building Height (ft.)	35 feet	*Ordinary High Water Mark*	60 feet
Max. Building Height (stories)	2.5 stories		
Min. Elevational Width of a Principal Structure	24 feet		

Area and bulk requirements shall be subject to the provisions of Article 4 "Schedule of Regulations" limiting the height and bulk of buildings, the minimum size of lot permitted by land use, the maximum density permitted, and providing minimum yard setback requirements.

Section 3.12 C-1, Commercial District (currently Section 6.6)

(A) Intent and Purpose (currently Section 6.6.1)
This section establishes the C-1 Commercial District to allow for convenience type shopping for Township residents and for limited marina and transient lodging facilities. It is the purpose of this regulation to avoid undue congestion on major highways, to promote smooth and safe traffic flow along highway routes. Commercial activities within this district are those which primarily offer goods and services which are generally required by a family at intervals of a week or less.

(B) Uses Permitted by Right (NEW SECTION)	(C) Uses Permitted by Special Use Permit (currently Section 6.6.2)
• N/A	• Boat Livery • Child Care Centers • Farm Supply and Implement Dealers • Gasoline Stations and Automobile Service Stations • Hotels, motels, and tourist courts • Junk Yard • Marinas • Off-street Parking Lots • Professional Offices • Recreational Unit Sales • Restaurants and Taverns • Retail Sales • Self Service Storage Facility • Service Institutions • Sewage Treatment and Disposal Installations • Utilities • Warehousing of Products Sold at Retail on Premises • Wind Energy Conversion Systems (WECS) • Wireless Telecommunication Towers

The above list is a summary of uses permitted by right or special land use approval in the district, subject to Section 3.06.

Deleted: Other Similar

Deleted: Uses

(D) Dimension Regulations (currently Section 6.6.4 and Section 6.8)			
Lot Standards		***Minimum Setbacks***	
Min. Lot Area (sq. ft.)	25,000 sq. ft.	*Front Yard*	35 feet
Min. Lot Width (ft.)	150 feet	*Side Yard*	10 feet
Max. Lot Coverage (%)	35 percent	*Rear Yard*	30 feet
Max. Building Height (ft.)	35 feet	*Ordinary High Water Mark*	60 feet
Max. Building Height (stories)	2.5 stories		
Min. Elevational Width of a Principal Structure	n/a		

Area and bulk requirements shall be subject to the provisions of Article 4 "Schedule of Regulations" limiting the height and bulk of buildings, the minimum size of lot permitted by land use, the maximum density permitted, and providing minimum yard setback requirements.

Section 3.13 Shoreline Overlay District (NEW)

(A) Intent and Purpose (currently Section 7.4.1). It is the intent and purpose of this Ordinance to protect surface and groundwater quality, existing vegetated natural shoreline areas, wildlife habitats, and prevent erosion and sedimentation of the shoreline area. It is also the intent of this section to provide guidelines for recreational usage of private, shared, and public shoreline areas that promote the health, safety, and welfare of the general public. This section's purpose establishes regulations that apply in addition to those of the underlying zoning district which support land management practices that conserve and protect the Grand Traverse Bay shoreline throughout the Township. Where the provisions of this district conflict with those of the underlying zoning district, the provisions of this section shall supersede.

(B) Township Permit Required. For activities within the Shoreline Overlay District requiring a building permit, increasing the amount of impervious cover on the parcel, dredging, filling, or reducing the amount of vegetated buffer or tree canopy cover, a site plan for the parcel must be presented to the Zoning Administrator for administrative review to ensure compliance with the provisions of the Overlay District. The requirement for a Township permit is in addition to any Soil Erosion and Sedimentation Control (SESC) permit requirements that may apply, if applicable. Normal gardening activities in compliance with this Section do not require a Township permit.

(C) Establishment of Shoreline Overlay District and Sub-Districts. For purposes within this section and throughout this Ordinance, the Shoreline Overlay District shall exist within 200 feet of the Ordinary High Water Mark (OHWM). This unique physical and Township wide attribute is hereby divided into 2 different zones as illustrated and defined within the following.

(1) Waterfront Sub-District Intent, Purpose, and Regulations. The Waterfront Sub-District's intent and purpose is to protect the natural vegetation in order to prevent erosion, improve stormwater quality, limit invasive shoreline plants and the application of pesticides, herbicides, and fertilizers, while maintaining fish and wildlife habitats within areas of the Township where shorelines exist. Lands within this designated area shall adhere to the following regulations:

(a) Waterfront Sub-District Area. The Waterfront Sub-District shall extend inland 60 feet from the Ordinary High Water Mark (OHWM). If the 60-foot boundary ends on a slope greater than 9 percent, then the boundary of the Waterfront Sub-District shall extend to 5 feet beyond the point at which the slope of the land is less than 9 percent.

(b) Yard Waste Storage Prohibited. Storage of leaves, grass clippings, and similar yard and garden waste is prohibited.

(c) Maintenance and Removal of Vegetation. Maintenance and removal of vegetation shall be limited to removal of dead limbs, trimming tree limbs, and replacement of dead trees, shrubs, and vegetation.

Deleted: water quality and land resources related to the Great Lakes Shoreland for the future health, safety and welfare of Township residents.

Commented [PS28]: This proposed section has been revised to emphasize that gardening is exempt, dredging and filling requires a permit, and SESC permitting may apply.

(d) **Septic Areas Prohibited.** Septic tanks and septic systems filtration fields are prohibited unless the Health Department determines that there is no other feasible location.

(e) **Permitted Storage.** Temporary off-season storage of portable decks, boats, boat hoists, and other water recreational items is permitted, provided that storage does not take place in a required side yard setback or road right-of-way. All items stored outdoors shall be operational.

(f) **Dredging or Filling.** Dredging or filling, including the addition of beach sand, is prohibited below the OHWM except where permitted by State or Federal law. Beach sanding above the OHWM requires the establishment of a natural vegetative barrier or slope maintenance to ensure that any sand placed above the OHWM will not be blown or eroded into the water body. The Zoning Administrator may require the plan to be reviewed by the Township Engineer prior to issuance of a permit per *Section 3.13(B).*

(g) **Structures and Impervious Surfaces.** Structures and impervious surfaces such as decks, elevated walkways, boat ramps, and retaining walls must be reviewed and approved by the Township Zoning Administrator and other applicable reviewing agencies, prior to construction efforts taking place.

(h) **Vegetated Buffer Required.** Where possible, 70 percent of the Waterfront Sub-District shall be covered with a mix of native grasses, trees, shrubs, and other plants to establish a viable groundcover. No lot coverage or impervious surface shall be permitted within the vegetative buffer portion of the Waterfront Sub-District. If the vegetative cover is less than 70 percent prior to construction activity or if the construction activity will result in reducing the vegetative coverage to less than 70 percent, then the plan submitted for the land use permit shall include additional vegetative cover to be planted in the Waterfront Sub-District that will achieve 70 percent vegetative coverage over the long term, to the extent that such vegetative coverage is possible, to the satisfaction of the Zoning Administrator. The plan submitted by the applicant to meet this requirement shall be certified by a Registered Landscape Architect. If compliance with this requirement is not feasible, the applicant's Registered Landscape Architect must state the reasons on the certified plan. The species plant materials proposed must be acceptable to the Township, and the Township may maintain a list of acceptable species and prohibited species.

(2) **Upland Sub-District Intent, Purpose, and Regulations.** The purpose of the Upland Sub-District is to manage impervious cover, improve storm water quality, prevent soil erosion, and effectively retain tree canopy cover in areas near the shoreline which traditionally are host to residential land uses. Lands within this designated area shall adhere to the following regulations:

(a) **Upland Sub-District Area.** The Upland Sub-District shall be identified as the lands adjacent to the Waterfront Sub-District and exist within the area between the Waterfront Sub-District boundary and 200 feet from the OHWM.

(b) Tree Canopy Required. Where possible, 30 percent of the land area within the Upland Sub-District shall be maintained in tree canopy cover as defined by this Ordinance. If the tree canopy is less than 30 percent prior to construction activity or if the construction activity will result in reducing the tree canopy coverage to less than 30 percent, then the plan submitted for the land use permit shall include 1 or more new large deciduous trees (at least 2.5-inch caliper) to be planted in the Upland Sub-District that will achieve 30 percent canopy coverage over the long term, where possible, to the satisfaction of the Zoning Administrator. The plan submitted by the applicant to meet this requirement shall be certified by a Registered Landscape Architect.

(D) Docks (currently Section 6.2.2(2)(c)).

(1) Maximum Number of Docks and Boat Hoists. A maximum of 1 dock per parcel is permitted per 50 feet of shoreline, measured at the ordinary high water mark,

(2) Nonconforming Lots. A maximum of 1 dock and 1 boat hoist is allowed on properties of insufficient size for a single-family dwelling, provided the following conditions are met:

(a) The lot is a pre-existing lot of record or has a minimum width of 50 feet; and

(b) A minimum of 2 parking places must be provided off the adjacent road right-of-way. In the event of properties owned by the same party being separated by a thoroughfare, parking may be provided on the inland parcel and need not be in excess of that required for a single-family dwelling.

(3) Maximum Dock Width and Length. Where a dock is within the jurisdiction of Peninsula Township, no dock shall be wider than 7 feet and no longer than necessary to provide adequate water depth for the boat using the dock or boat hoist.

(4) Shared Waterfront Ownership. Shared waterfront ownership is allowed pursuant to *Section 3.13(F)*.

(E) Decks, Storage, and Walkways Located in the Ordinary High Water Mark Setbacks or Front Yard Setback (currently Section 6.2.2(2)(d)).

(1) Intent. It is the intent of this section to allow reasonable use of shoreline property by allowing decks with attached seating and enclosed storage to be located in front yard setback and ordinary high water mark setback areas. It is also intended to only allow decks in locations where shoreline vegetation can be retained to protect scenic beauty, control erosion, reduce septic tank effluent, and reduce other nutrients from entering the water. It is recognized that there are shoreline areas where decks and/or storage are not appropriate or reasonable because of the limited area between the road right-of-way and the Ordinary High Water Mark. It is also recognized that the levels of the Great Lakes vary over time, and it can be hazardous to build structures where they may be damaged by high water or become a hazard to boats if they are destroyed by wave action.

Commented [PS29]: Because a Boat Hoist is located in the water, it cannot be regulated by the Township in the same manner as a dock which is connected to upland area.

Deleted: Boat Hoists and
Deleted: one (
Deleted:)
Deleted: plus one boat hoist,
Deleted: fifty (
Deleted:)
Deleted: line
Deleted: , provided that a pre-existing lot of record is allowed at least one dock and one boat hoist
Deleted: Boat hoists and d
Deleted: s
Deleted: are
Deleted: fifty (
Deleted:)
Deleted: also provided that provision is made for a
Deleted: two (
Deleted:)
Deleted: N
Deleted: seven (
Deleted:)
Deleted: (REVISED BY AMENDMENT 109C)
Deleted: and
Deleted: line
Deleted: Line

(2) **Deck and Storage Requirements.** Uncovered decks (including attached seating and/or attached storage) shall be allowed within the required Ordinary High Water Mark and the Front Yard setbacks in the case of properties located along the Great Lakes shoreline, provided all of the following are met:

(a) **Location.** All parts of the deck, attached seating, storage and railing shall be constructed within a building envelope as provided below: (See *Figure 6, Figure 7, Figure 8, Figure 9,* and *Figure 10*)

(i) **Ordinary High Water Mark Setback.** Located a minimum distance of 35 feet from the Ordinary High Water Mark.

(ii) **Above Flood Elevation.** Located above the Flood Elevation Line which is 584 feet above sea level (USGS), or as otherwise determined by the U.S. Government.

(iii) **Side Yard Setback.** Located at least 15 feet from the side lot line.

(iv) **Maximum Height of Deck.** The floor of the deck at any point shall not have a height greater than 30 inches above the finished grade of the site and no higher than the center of the traveled surface of the adjacent roadway.

(v) **Maximum Height of Attached Seating.** Attached seating shall be no higher than 34 inches above the floor of the deck or 64 inches above the finished grade below, whichever is higher, provided that it is no higher than 34 inches above the center of the traveled surface of the adjacent roadway.

(vi) **Maximum Height of Enclosed Storage.** Enclosed storage shall be no higher than 34 inches above the floor of the deck or 64 inches above finished grade, whichever is higher, provided that it is no higher than 34 inches above the center of the traveled surface of the adjacent roadway.

(vii) **Slope.** Decks and storage shall not be built on or within 5 feet from a slope with a grade greater than 9 percent.

(b) **Allowable Attachments.** There shall be no walls, roofs or other construction attached to a deck other than the allowed seating, storage and railings required to meet the minimum requirements of construction codes.

(c) **Unattached Items.** Unattached items such as umbrellas, grill, swing or hammock are allowed as accessories to a deck.

(d) **Concealment of Enclosed Storage.** Enclosed storage areas shall be constructed so as to conceal all stored material.

Deleted: Decks
Deleted: Line
Deleted:
Deleted: Figure 6-1
Deleted: Line
Deleted: which is 581 feet above sea level (USGS)
Deleted:);
Deleted: outside the
Deleted: fifteen foot
Deleted: yard setbacks; iv
Deleted:
Deleted: thirty (
Deleted:)
Deleted: Seating
Deleted: and

(e) Maximum Surface Area. The total area of land covered by the deck, seating, and storage located within the front yard setback area or ordinary high water mark setback area shall not exceed 10 percent in any of the following land areas:

(i) Front Yard Area, Lots With a Residence. The land area located outside of the side yard setbacks extending from the front lot line to the closest part of the foundation of the residence.

(ii) Waterside Area, Lots With a Residence. The land area located outside of the side yard setbacks extending from the ordinary high water mark to the closest part of the foundation of the residence.

(iii) Lots Without a Residence. The land area located outside of the side yard setbacks extending from the front lot line to the ordinary high water mark, provided the appropriate areas of the deck, seating, and storage are removed prior to construction of a residence.

(f) Prohibited Structures. Patios and similar structures are prohibited in the Ordinary High Water Mark Setbacks or Front Yard Setback.

(g) Prohibited in Road Right-of-Way or Private Road Easement. No deck shall be constructed within a road right-of-way or private road easement.

Figure 5. Waterfront Elevation for Decks

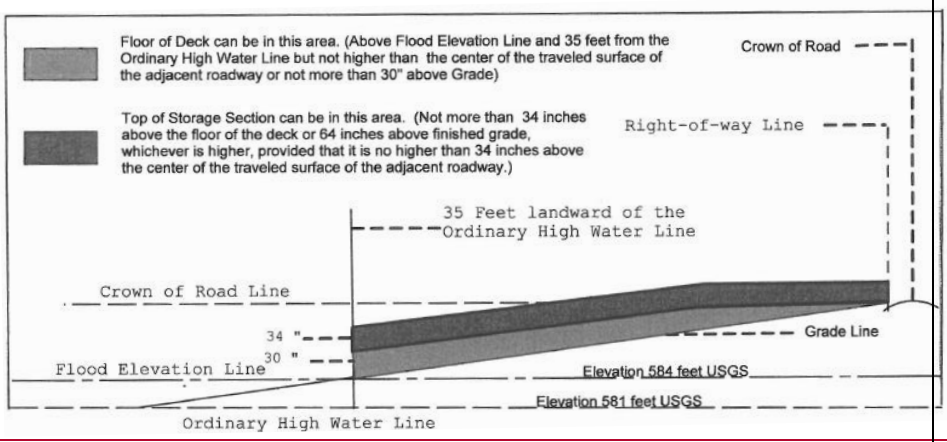

Deleted: ten

Deleted: (10%)

Deleted: of that

Deleted: within

Deleted: : a)

Deleted: road right-of-way

Deleted: ; or b) where there is a residence on the parcel, from a line parallel to the road right-of-way and touching the closest part of the foundation of the residence to the ordinary high water line

Figure 6. Typical Deck Elevation (Top)

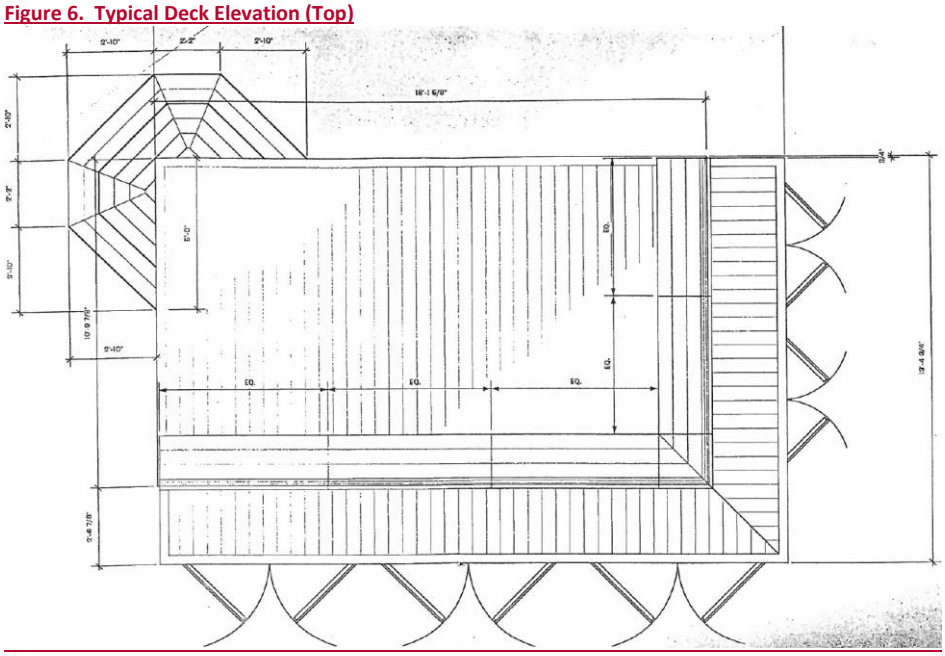

Figure 7. Typical Deck Elevation (West)

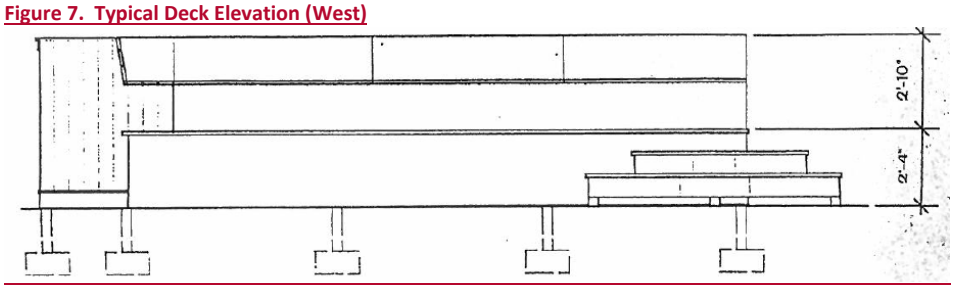

Figure 8. Typical Deck Elevation (South)

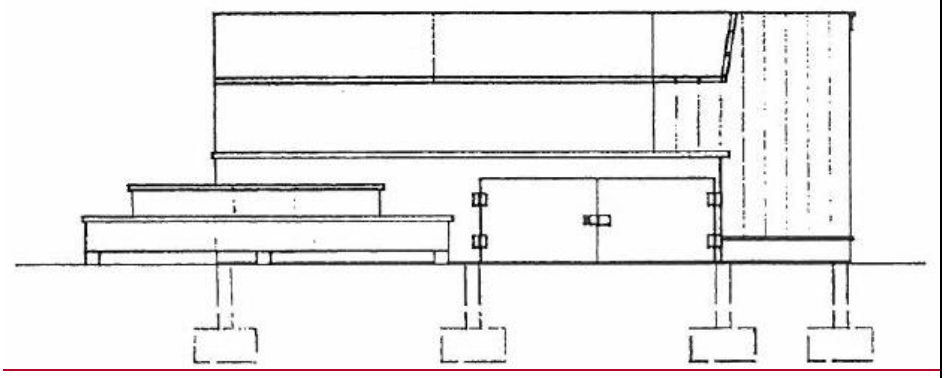

Figure 9. Typical Deck Elevation (North)

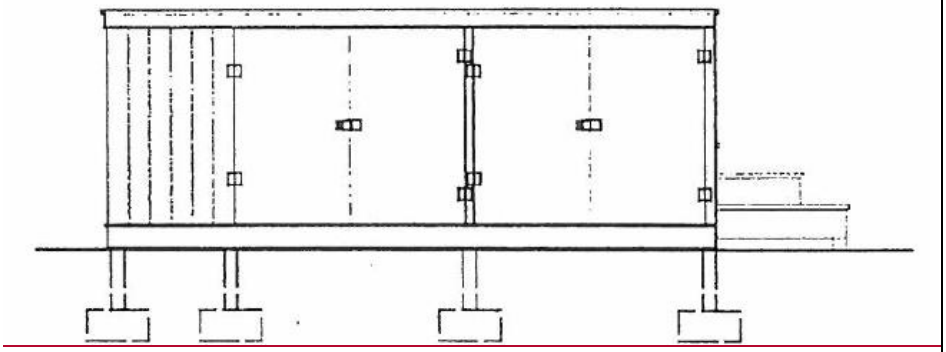

Figure 10. Typical Deck Elevation (East)

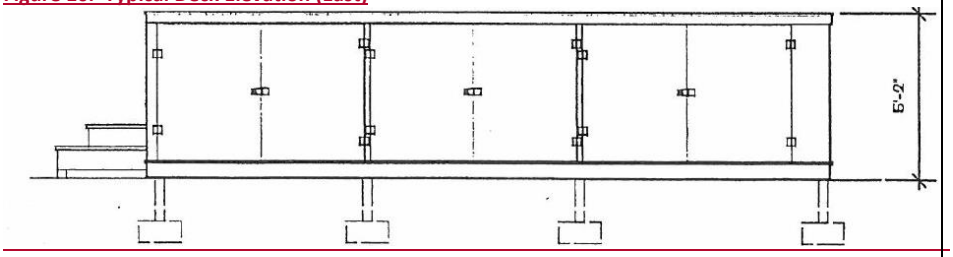

(3) Walkway Requirements. A constructed walkway or sidewalk may be located in an Ordinary High Water Mark Setbacks or Front Yard Setback, provided the width does not exceed 4 feet and the slope does not exceed 5 percent. Access steps required to negotiate changes in site elevation are permitted, provided that landings are no greater than 4 feet by 4 feet.

(F) Shared Waterfront Ownership (currently Section 7.4.2). Any waterfront land that is to be used by more than one family shall meet the following requirements:

(1) Intent. It is the intent of this section to reduce the conflicts that occur between residential single-family use and shared waterfront use, such as a number of families using the beach, making noise, trespassing, temporarily storing boats, boat hoists, and other equipment, and impact to shoreline vegetation.

(2) Land Use Permit. Where more than one family has Shared Waterfront Ownership in the waterfront property, a land use permit shall be obtained from the Zoning Administrator. The application for land use permit shall indicate the number of families with access rights, the name and address of a principal family member for each family, the name and address of one person who shall receive the tax bill in the event that all families do not have taxable real property in Peninsula Township, and a site plan showing compliance with the minimum requirements of this *Section 3.13(F)*. The Zoning Administrator shall be notified of any change in ownership and a new land use permit may be required.

(3) Minimum Lot Widths and Vehicle Parking Space Requirements:

(a) For shared waterfront property. Not approved within a Subdivision or Condominium.

Number of Families with Access Rights	Minimum Lot Width
2 Families	100
3 Families	150
4 Families	200
Over 4 Families	5 additional feet per family

(b) 1 parking space for each boat hoist shall be provided off the traveled portion of the road such that all portions of a parked vehicle are at least 5 feet from the driving lane to provide safe egress from the vehicle.

(c) Each parking space shall be a minimum of 23 feet in length. The parking space does not have to be paved or graveled.

(4) Maximum Number of Docks and Boat Hoists. Group docking, hoist and other related facilities and boat hoists shall not exceed 1 dock per parcel and 1 boat hoist per 50 feet of shore line, measured at the ordinary high water mark, and shall be located as near as possible to the center of the parcel.

(5) Maximum Dock Width and Length. Where a dock is within the jurisdiction of Peninsula Township, no dock shall be wider than 7 feet and no longer than necessary to provide adequate water depth for the boat using the dock or boat hoist.

(6) Dwellings and Clubhouses Prohibited. No dwelling units or clubhouses are allowed on shared waterfront parcels.

Deleted: Two
Deleted: Three
Deleted: Four
Deleted: Four
Deleted: Five
Deleted: five (
Deleted:)
Deleted: twenty-three (
Deleted:)
Deleted: one
Deleted: one
Deleted: fifty (
Deleted:)
Deleted: N
Deleted: seven (
Deleted:)

(7) **Minimum Side Yard Setback.** The area within 15 feet of side lot lines shall not be used for the permanent or temporary placing or storage of boats, boat hoists and other equipment, nor for locating fire pits or decks flush with the ground.

(8) **Portable Sanitary Facilities.** A portable toilet is allowed, provided the Township is notified of the placement and maintenance schedule for the toilet. The toilet shall not be placed within a road right-of-way or closer than 30 feet from the ordinary high water mark. The toilet shall be screened from the nearest property line, the road, and the water.

(G) Filling and grading within 200 Feet of Normal High Water Mark (currently Section 7.4.3). In addition to any State, County, or local soil erosion and sedimentation control requirements, the following rules shall apply to any filling, grading or other earth movement beyond normal gardening within 200 feet of the ordinary high water mark to prevent harmful erosion and related sedimentation:

(1) The smallest amount of bare ground shall be exposed for as short a time as feasible.

(2) Temporary ground cover such as mulch must be used as soon as possible and permanent cover, such as sod, shall be planted.

(3) Diversions, silting basins, terraces, and other methods must be used to trap any sediment.

(4) Fill must be stabilized according to accepted engineering practices.

(5) The Zoning Administrator may issue a land use permit for a sea wall without regard to the minimum yard setback from the ordinary high water mark otherwise required in *Article 4* when a sea wall is necessary to protect or prevent structures on the premises from erosion damage caused by high water and a seawall permit has been obtained by the State of Michigan and/or the U.S. Army Corps of Engineers.

(H) Removal of Shore Cover (currently Section 7.4.4). Regulation of tree cutting along the Great Lakes shoreline is necessary to protect scenic beauty, control erosion and reduce effluent and nutrient flow from the shore land. These provisions shall not apply to the removal of dead, diseased or dying trees at the discretion of the landowner, or to silvicultural thinning upon recommendation of a forester. Tree cutting in a strip paralleling the shoreline and extending 35 feet inland from all points along the normal high water mark of the shoreline shall be limited in accordance with the following provisions:

(1) **Maximum Clearing.** No more than 30 percent of the length of this strip shall be clear cut to the depth of the strip.

(2) **Maximum Clear Cut Opening.** Cutting of this 30 percent shall not create a clear cut opening in this strip greater than 30 feet wide for every 100 feet of shoreline.

Deleted: fifteen (
Deleted:)
Deleted: it is
Deleted: , and
Deleted: not
Deleted: twenty (20)
Deleted: water's edge
Commented [PS30]: Currently, the setback measurement is to the water's edge. To be consistent with the rest of this Ordinance, "water's edge" has been replaced with "ordinary high water mark," which iis defined.
Deleted: Also provided that screened
Deleted: between the toilet and
Deleted: T
Deleted: normal
Deleted: Minimum
Deleted: thirty-five (
Deleted:)
Deleted: %
Deleted: Provided, further that c
Deleted: %
Deleted: thirty (
Deleted:)
Deleted: one hundred (
Deleted:)

(3) **Remaining Vegetative Cover.** In the remaining 70 percent length of this strip cutting shall leave sufficient cover to screen cars, dwellings, accessory structures, as seen from the water; to preserve natural beauty; and to control erosion.

(4) **Preservation and Re-Vegetation.** Natural shrubbery shall be preserved as far as practicable, and where removed it shall be replaced with other vegetation that is equally effective in retarding runoff, preventing erosion, and preserving natural beauty, per the requirements of *Section 3.13(C)(1)*.

(5) **Paths.** Any paths, roads or passages within the strip shall be so constructed or surfaced as to be as effective in controlling erosion.

(6) **Cutting Plan.** As an alternative to the above requirements a special cutting plan allowing greater cutting may be permitted by the Zoning Administrator, or the Zoning Administrator may defer the decision to the Planning Commission. In applying for such a permit the Zoning Administrator, or Planning Commission, shall require the lot owner to submit a plan of his lot including the following information: location of all structures, location of parking, gradient of the land, existing vegetation, proposed cutting and proposed replanting. The plan shall be certified by a Registered Landscape Architect. The Zoning Administrator, or Planning Commission, may grant such a permit only if it finds that such special cutting plans:

(a) Will not cause undue erosion or destruction of scenic beauty, and

(b) Will provide substantial shielding from the water of dwellings, accessory structures and parking areas. The Board may condition such a permit upon a guarantee of tree planting by the lot owner. Such an agreement shall be enforceable in court.

(7) **Commercial Forestry.** From the inland edge of the 35-foot strip to the outer limits of the shore land the commercial harvesting of trees shall be allowed when accomplished under accepted forest management practices. The maintenance and improvement of water quality shall be emphasized in all timber harvesting operations. The purpose of this provision will favor long-lived species.

(I) **Review by the State of Michigan (currently Section 7.4.5).** If it is determined by the Zoning Administrator that any proposed structure may adversely effect, deteriorate or alter the shore land resource, preliminary plans and specifications shall be transmitted to the staff of the Michigan Department of Environmental Quality (MDEQ) for review and approval. If it is determined by the MDEQ staff that such development would adversely affect public and private rights, impair the public trust or otherwise deteriorate the unique shore land resource, such determination shall be considered sufficient justification for denying a building permit.

(J) **Road Ends.** There shall be no common dockage (or other similar structures) or restriction of access at public road ends within the township.

Deleted: %

Deleted: Board of Appeals

Deleted: Board

Deleted: may

Deleted: sketch

Deleted: Board

Deleted: thirty-five (

Deleted:)

Deleted: Water Resource Commission

Deleted: Water Resources Commission

Section 3.14 Airport Overlay District (currently Section 7.9)

(A) Purpose and Intent (NEW SECTION). The purpose of the Airport Overlay District is to permit land uses and development within the Overlay District in an orderly manner that does not conflict with the adopted plan of the Cherry Capital Airport and is not hazardous to aircraft.

(B) Definitions (currently Section 7.9.1)

(1) Airport Overlay Zone District. The Airport Overlay Zone District is the airport hazard area consisting of all of the lands within Peninsula Township lying beneath the approach, transitional, 149 feet horizontal, conical and 500 foot horizontal surface; said land being located within a circle having a radius extending horizontally (6.32 miles) from the established center of the useable landing area of the airport.

(2) Critical Zone. The critical zone includes the clear zone approach-departure surface and the transitional surface as defined in the attached diagram (Airport Imaginary Surfaces).

(3) Inner Horizontal Surface Area. The inner horizontal surface area is that area surrounding the airport for a distance of 3 miles, excluding the clear zone surface, transitional surface and airport approach-departure clearance surface.

Deleted: three

(4) Other Horizontal Surface. The outer horizontal surface is the airport hazard area less the critical zone area beyond a 3 mile distance of the Inner Horizontal Surface area to the outer boundary of the Airport Overlay Zone District.

Deleted: three

(C) Area Affected (currently Section 7.9.2). Every parcel of land which lies in whole or in part within the Airport Overlay Zone as depicted on the Official Zoning Map is subject to the regulations of this Overlay Zone to the extent the parcel lies within this Overlay Zone. The regulations of this Overlay Zone are in addition to any regulations in the underlying land use district; however, these regulations supersede all conflicting regulations of the underlying land use district to the extent of such conflict, but no further.

(D) Height Limitations (currently Section 7.9.3). No person shall erect any building or structure to an actual height in excess of the height limitations indicated below unless issued a permit by Peninsula Township. Structure heights exceeding the following limitations may be granted a permit upon receipt of a favorable review in response to notice being filed with the FAA or State of Michigan Aeronautical Department by the applicant in response to the applicant's submission of a Form 7460.

(1) No structure within the inner horizontal surface area shall exceed the elevation of 774 U.S.G.S. (except as provided in *Section 3.14(D)(4)*).

Deleted: Subsection D

(2) No structure will be allowed to penetrate the critical zone surface as depicted on Sheets 2 through 4 of the official Airport Zoning Plans (except as provided in Subsection D).

(3) No structure shall be allowed to penetrate the conical or outer horizontal surfaces as depicted on Sheets 2 through 4 of the Official Airport Zoning Plans (except as provided in Subsection D).

(4) Provided, however, a structure having a height of 35 feet or less, will be allowed to penetrate any surface area and will not be subject to this section.

(E) **Conflicting Federal or State Regulations (currently Section 7.9.4).** The regulations of the Airport Overlay Zone are not intended to conflict with existing or future approach protection regulations promulgated by the United States (Federal Aviation Regulations Part-77), the State of Michigan (P.A. 23 of 1950 as amended by P.A. 158 of 1976), or any agencies thereof, including, but not limited to, the giving of notice of any construction, erection or alteration of a building or structure that:

(1) Would be more than 149 feet above ground level at its site.

(2) Would be above any imaginary surface extending outward and upwards at 100:1 slope within 20,000 feet of the nearest point of an airport runway more than 3,200 feet in length; or

(3) Would be above any imaginary surface extending outward and upward at 50:1 slope within 10,000 feet if the nearest point of an airport runway less than 3,200 feet in length.

(F) **Unlawful Land Uses (currently Section 7.9.5).** It shall be unlawful to put any parcel within 3 miles (inner horizontal surface area) of the Airport to any use which would:

(1) Create electrical interference with radio communication between the airport and aircraft or create interference with navigational aids employed by the airport or by aircraft.

(2) Make it difficult for aircraft pilots to distinguish between airport lights and other lights or result in glare in the eyes of aircraft pilots using the airport.

(3) Create air pollution in such amounts as to impair the visibility of aircraft pilots in the use of the airport.

(4) Would endanger the landing, taking off or maneuvering of aircraft.

(5) Abnormally attract birds.

(6) Would otherwise create an airport hazard.

(G) **Land Use Guidance Zones (currently Section 7.9.6)**

(1) **Purpose.** The purpose of Land Use Guidance Zones (Sheet 5, Airport zoning Plans) is to designate areas where in certain types of land uses that are recommended due to undesirable effects that may be caused due to the operation of aircraft within such zones.

(2) **Acceptable Land Use.** The use of land within the areas shown on the zoning plans are compatible, land use as outlined in Land Use Guidance Chart II, as shown on Sheet 5 of the zoning plans.

(H) **Official Zoning Map (currently Section 7.9.7).** The Official Zoning Map is hereby amended to show the Airport Overlay Zone as provided for in the approved Cherry Capital Airport Zoning Plans Sheet 1 through 5, as approved by the Peninsula Township Planning Commission on November 21, 1989.

Section 3.15 Conservation Easement Restricted Farmland (currently Section 6.7.5)

(A) Intent. The Peninsula Township Purchase of Development Rights Ordinance allows future building sites under certain conditions and in specific locations as shown on recorded conservation easements. It is the intent of this section to allow those future building sites to be used for residents on the farm or to be sold along with all or a portion of the restricted farmland with a minimum area of 1 acre or more. It is also the intent of this section avoid the conversion of preserved agricultural land by allowing access to these individual future building sites without requiring a new public or private road to the site.

(B) Reserved Building Site Access. Restricted farmland may be divided without the requirement of providing access to a public or private road irrespective of *Section 9.07* provided:

(1) A reserved dwelling site shall have access to an existing road by either a driveway or a new private road, which shall be located within 33-foot wide access easement. Access by private road shall be required if it serves or is to serve 3 or more residences.

(2) A residential building site may be separated from the remainder of the restricted farmland on a parcel of not less than 1 acre irrespective of *Article 4* with access as provided in *Section 3.15(B)(1)* above.

(3) Where access is provided by a driveway and not a public or private road; the front yard setback will be 50 feet rather the 35-foot front yard setback required from a public or private road.

Deleted: one

Deleted: three (3)

Deleted: one

Deleted: (1)

Deleted: fifty (

Deleted:)

Deleted: thirty-five (

Deleted:)

Deleted: (ADDED BY AMENDMENT 117A)

Section 3.16 Productive Agricultural Buffer Overlay (Currently Section 7.2.7)

Commented [PS31]: This change involves using existing Section 7.2.7 (Setback for Agricultural Lands Abutting Certain Residential Land Uses) as an overlay district. This overlay district started with the policies of the Master Plan and combined them with some of the setback provisions/intent of the existing Zoning Ordinance. This also involves increasing the setback on new metes and bounds lots in Section 7.09 from 50 feet to 100 feet.

(A) Purpose. Starting in 1994, Peninsula Township began an extensive Purchase of Development Rights (PDR) program and has assessed a millage to acquire development rights from private landowners to protect prime agricultural land. Over the proceeding 15-year period from 1994-2009, over 2,800 acres – almost 4.5 square miles – have been protected from further nonagricultural development through the PDR program, making the PDR area larger than any other zoning district except the A-1 district.

Since the inception of zoning in Peninsula Township, it has been common practice to allow many uses not covered by other zoning districts to be allowed in the A-1 zoning district. However, since the adoption of the PDR program and other efforts to preserve productive agriculture, Peninsula Township has informally created a more strictly defined agricultural zoning district (see development and use restrictions of PDR land in *Section 3.15*, Ordinance 23 [Purchase of Development Rights Ordinance], and Ordinance 45 [Donation of Development Rights Ordinance]). Because the development and use restrictions of *Section 3.15*, Ordinance 23, and Ordinance 45 permit very limited uses other than productive agricultural uses, there are fewer areas in the A-1 where other permitted and special land uses may occur, such as agritourism uses. Additionally, the 2011 Peninsula Township Master Plan includes a goal of preserving 9,000 acres or prime and unique, contiguous farmland.

The purpose of the Productive Agricultural Buffer Overlay is to separate productive agricultural land in the Overlay from the remaining land in the underlying zoning districts by:

(1) Reinforcing the accommodation of rural land uses in the A-1 district as a means of supporting productive agricultural uses. Such rural land uses include agritourism uses and other uses permitted in the district in accordance with this Ordinance.

(2) Buffering productive agricultural uses from neighboring incompatible land uses, and vice versa, via setbacks, greenbelts, and the placement of compatible rural agricultural land uses that interface with both.

(3) Cross-referencing agricultural setback provisions elsewhere in this Ordinance that apply to both agricultural uses and neighboring residential lots.

(B) Location of Productive Agricultural Buffer Overlay Areas. The buffering and land use provisions of Productive Agricultural Buffer Overlay shall apply to the following lands, and the affected areas shall expand and retract as the following areas change:

(1) Conservation Easement Restricted Farmland (see *Section 3.15*);

(2) All other land in agricultural production located on a farm in an agricultural or residential zoning district; and

(3) All residential or residentially-zoned lot abutting *(1)* or *(2)* above.

(C) Required Setback Buffers and Prohibited Uses:

(1) On Agricultural Production Lots When Adjoining Lots Convert to Residential Use (currently Section 7.2.7). In the event that lands abutting a mobile home park, subdivision, site condominium, planned unit development, or any other residential use are brought into agricultural production after the development of the residential use, the agricultural production lands and the related activities thereon shall be separated from the adjoining residential lot line by 100 feet. The buffer under the control of the farm operator shall be measured between the lands used for agricultural production and the adjoining residential lot.

(2) On Residential Lots When Adjoining Lots Convert to Agricultural Production. Pursuant to *Section 7.09*, new dwelling units on lots that abut lots with agricultural production shall be separated from the adjoining agricultural lot line by 100 feet unless an exception is granted in accordance with the provisions therein.

(D) Permitted Uses in the Required Buffer Areas. With the exception of agricultural production land and dwelling units, which are prohibited in the required buffer areas pursuant to *Section 3.16(C)*, all other uses and development permitted in this Ordinance in the respective underlying zoning district may take place in the buffer area (including agricultural buildings on agricultural land and accessory buildings on residential land), provided the applicable standards of this Ordinance are met.

Deleted: mobile home park

Deleted: any residential or accessory structure by a buffer of

Deleted: one hundred (100)

Deleted: in width

Deleted: purposes

Deleted: any residential or accessory structure on the adjacent parcel

Section 3.17 Neighborhood Overlay District

(A) Purpose. There are small, established neighborhood areas in Peninsula Township with residential lots that do not meet the minimum lot area and/or lot width of the underlying zoning district; thus, in many cases residential buildings cannot be constructed on these neighborhood lots without variance approvals from the Zoning Board of Appeals. In general, such issues can often be resolved by granting variances, rezoning the lot(s) to a more suitable zoning district, or amending dimensional requirements of the existing zoning district. However, for the following reasons, these resolutions are not appropriate for the Neighborhood Overlay District:

(1) Continually granting variances to similar lots in the same area for the same reasons will result in recurring variance approvals, which is discouraged in *Section 14.04*.

(2) Amending the lot area, lot width, setback, and lot coverage requirements of the underlying zoning district could have the effect of undermining the character of the zoning district as a whole and lead to undesirable development patterns elsewhere in the district.

(3) Creating a new zoning district for the Neighborhood Overlay District areas will be very similar to the existing zoning districts with respect to use and development pattern, with the only exceptions being those stated in this section for side yard setbacks and lot coverage.

(B) Location of Neighborhood Overlay District. The location of the Neighborhood Overlay District shall only apply to those residential neighborhood areas delineated on the Zoning Map that were established before the adoption of this Ordinance and have a historic character worthy of inclusion in the Neighborhood Overlay District. The boundaries of the Neighborhood Overlay District shall not be expanded to apply to isolated lots, or groups of lots, in the township that do not meet the requirements of this section for inclusion into the Neighborhood Overlay District. Prior to considering amending the Zoning Map to include a land into the Neighborhood Overlay District, the Township shall consider if a better remedy is to grant a variance, amend the provisions of the applicable zoning district, or to create a new zoning district, as described in *Section 3.17(A)* above.

(C) Development Standards. All lots in the Neighborhood Overlay District shall meet the development standards of the underlying zoning district, except in accordance with the development standards of the following Neighborhood Overlay District Sub-Districts and their adopted Pattern Books as follows:

Commented [PS32]: At the July 18, 2016 PC meeting, the PC decided not to include development standards at this time but to include a format for their future adoption. As such, sub-section (C) has been revised to provide for the future creation of "Sub-Districts," which, similar to the Shoreline Overlay District, will include Sub-District regulations for each neighborhood for which there will be regulations. Also, the revisions to this sub-section reference the Pattern Book of each Sub-District, which is referenced in the Master Plan. If a Sub-District is proposed to have a pattern book, we recommend adopting it into the Zoning Ordinance at the time the future regulations are adopted.

Article 4 Schedule of Regulations

Section 4.01 Statement of Purpose (NEW SECTION)

The purpose of this Article is to provide area, height, and placement regulations for districts established by this Zoning Ordinance.

Section 4.02 Schedule of Regulations (Currently Section 6.8)

The Regulations contained herein shall govern the Height, Bulk, and Density of Structures and Land Area by Zoning District.

Zoning District	Minimum Zoning Lot Size per Dwelling Unit		Maximum Height of Structures		Minimum Yard Setback per Lot in Feet from Each			Normal High Water Mark Setback	Maximum % of Lot Area Covered by All Structures	Minimum Elevational Width of a Principal Structure
	Area	Width (ft.)	Stories	Feet	Front	Side	Rear			
R-1A, Rural & Hillside	1 acre	150 (A)	2.5 (B)	35 (B)	30 (I)	15 (I)	30 (I)	60 (C)	15 percent	24 feet
R-1B, Coastal Zone, One & Two Family	25,000 sq. ft.	100 (A)	2.5 (B)	35 (B)	30 (I)	15 (I)	30 (I)	60 (C)	15 percent	24 feet
R-1C, Suburban Residential, One & Two Family	20,000 sq. ft.	100 (A)	2.5 (B)	35 (B)	25 (I)	15 (I)	30 (I)	60 (C)	25 percent	24 feet
R-1D, Community Residential, One & Two Family	15,000 sq. ft.	100 (A)	2.5 (B)	35 (B)	25 (I)	15 (I)	30 (I)	60 (C)	30 percent	24 feet
R-1A PUD; R-1B PUD; R-1C PUD; R-1A PUD	(D)	(D)	2.5 (B)	35 (B)	30 (D)	15 (D)	30 (D)	60 (C)	15 percent	24 feet
C-1, Commercial	25,000 sq. ft.	150	2.5 (B)	35 (B)	35	10	30	60 (C)	35 percent	
A-1, Agricultural	5 acres	330 (F), (G), (H)	2.5 (B)	35 (B)	35 (I)	50 (E), (I)	50 (E), (I)	60 (C)		

Section 4.03 Footnotes to Schedule of Regulations (Currently Section 6.8.1)

(A) See definition of "Lot, Width of, Frontage" and "Lot, Width of, Minimum."

(B) Allowable height variations are subject to the provisions of *Section 7.08*.

(C) Does not include fishing, boating or swimming docks, open decks, and boat hoists as provided in *Section 3.13(D)* and *Section 3.13(E)*.

(D) As approved under *Section 5.01*.

(E) The minimum setback for other than residential structures shall be 15 feet. Provided, however, the minimum side yard setbacks for residences shall be 15 feet on lots of record with

Deleted: In the case where curvilinear street pattern produces irregularly-shaped lots with nonparallel side lot lines, a lessor frontage width at the street line may be permitted provided that the lot width at the building line is equal to the lot width for that district

Deleted: Article VII, Section 7.3

Deleted: fifteen (

Deleted:)

Deleted: fifteen (

Deleted:)

lot widths of 199 feet or less that were recorded prior to the adoption of Amendment No. 91 by the Township Board on June 9, 1992.

(F) Where a lot in the Agricultural District has its access on a public road, the lot shall have a minimum lot width and frontage width of 330 feet. Where a lot in the Agricultural District has as its access from a private road, that lot shall have a minimum lot width and frontage width of 100 feet and if the lot also abuts a public road, the lot shall also have a width of not less than 330 feet on the public road side of the lot. Where a lot has been created by Planned Unit Development, the minimum frontage width shall be that which is approved by the Township Board.

(G) REQUIRED LOT SHAPE. A lot in the Agricultural District shall be of such shape that a square measuring 210 feet on a side can be located within the parcel. The square has no relevance to structure location or setbacks.

(H) Access to residential building sites on farmland subject to a recorded Conservation Easement consistent with the intent of Ordinance No. 23 shall be regulated by the provisions of *Section 3.15*.

(I) See *Section 7.09(A)* for required setbacks of residences adjacent to agricultural lands.

Deleted: one-hundred ninety-nine (

Deleted:)

Deleted: (REVISED BY AMENDMENT 108)

Deleted: frontage

Deleted: (REVISED BY 107D)

Deleted: (ADDED BY AMENDMENT 117B)

Deleted: (ADDED BY AMENDMENT 138A)

Article 5 Supplemental Zoning District Standards

Section 5.01 Planned Unit Developments (currently Section 8.3, Section 7.2.6, and Section 6.5A)

(A) Intent and Purpose (currently Section 6.5A.1 and Section 7.2.6(1))

(1) This section establishes planned unit development regulations for all agricultural and residential districts to allow the use of planned development in areas of the township where conventional development practices are not suited to the terrain; or existing land use or natural environmental conditions make conventional development practices undesirable yet the density allowed is suitable to the intent of the conventional district designated.

Deleted: the R-1A-PUD, R-1B-PUD, R-1C-PUD and R-1D-PUD,

Deleted: of

(2) It is the intent of this Ordinance that residential developments other than conventional subdivisions be designed, constructed, operated and maintained so as to be harmonious and appropriate in appearance with the existing or intended character of the general vicinity of the township in which they are located, and that such a use will not change the essential character of the area in which it is proposed. In as much as planned unit developments, mobile home parks and other group housing developments may involve higher densities of land use, or building types may distinctly differ from the single-family, conventionally-built dwellings which predominate the Township, periphery setbacks for such developments are established.

(B) Authorization (currently Section 8.3.1). It is the purpose of this Section to encourage more imaginative and livable housing environments within Residential Districts and to encourage the retention of agricultural land in active production within the Agricultural Zoning District through a planned reduction of the individual lot area requirements for each district, providing the overall density requirements for each district remain the same. Such reduction of lot area requirements shall only be permitted when a land owner, or group of owners acting jointly, can plan and develop a project as an entity and thereby qualify for regulation of that project as one land use unit, rather than an aggregation of individual buildings located on separate, unrelated lots. Under these conditions, a special use permit may be issued for the construction and occupancy of a planned unit development providing the standard, procedures, and requirements set forth in this Section can be complied with.

Deleted: the Planned Unit Development Districts and

(C) Objectives (currently Section 8.3.2). The following objectives shall be considered in reviewing any application for a special use permit for planned unit development.

(1) To provide a more desirable living environment by preserving the natural character of open fields, stand of trees, steep slopes, brooks, ponds, lake shore, hills, and similar natural assets.

(2) To provide open space options.

(3) To encourage developers to use a more creative and imaginative approach in the development of residential areas.

(4) To provide for more efficient and aesthetic use of open areas by allowing the developer to reduce development costs through the by-passing of natural obstacles in the residential project.

(5) To encourage variety in the physical development pattern of the Township by providing a mixture of housing types.

(6) To provide for the retention of farmland by locating the allowed number of housing units on the agricultural parcels of land in clusters which are suitable for residential use and keep the remaining agricultural land in production or fallow and available for production.

(D) Qualifying Conditions (currently Section 8.3.3). Any application for a special use permit for a PUD shall meet the following conditions to qualify for consideration as planned unit development:

(1) **Minimum Site Area.** The planned unit development project shall not be less than 20 acres in area, shall be under the control of one owner or group of owners, and shall be capable of being planned and developed as one integral unit. Provided that the project acreage requirement may be reduced by the Township Board if the Board determines that the proposed use is a suitable and reasonable use of the land.

Deleted: twenty (

Deleted:)

(2) **Permitted Zoning Districts.** The planned unit development project shall be located within a Residential or Agricultural District, or a combination of the above Districts. Individual planned unit developments may include land in more than one zone district in which event the total density of the project may equal but not exceed the combined total allowed density for each district calculated separately.

(3) **Water and Sanitary Waste Disposal.** Water and waste disposal shall comply with the Township Master Plan and be approved by Grand Traverse County or State of Michigan requirements. It is recognized that joining water and sewer ventures with contiguous or nearby land owners may prove to be expedient.

(4) **Density.** The proposed density of the planned unit development shall be no greater than if the project were developed with the lot area requirements of the particular zone district or districts in which it is located subject to the provisions of *Section 14.03* except as provided by *Section 5.01(G)(1)*.

Deleted: (REVISED BY AMENDMENT 168)

(5) **Open Space.** Open space shall be provided according to *Section 5.01(H)*.

(6) **Exceptions to Open Space.** For purposes of this *Section 5.01*, Open Space does not include building envelopes, limited common elements in condominium developments, parking lots and roads (roadbed width plus 2-foot shoulders on each side).

Deleted: two (

Deleted:)

(7) **General Standards and Conditions.** The proposed planned unit development shall meet all of the standards and requirements outlined in this *Section 5.01* and also *Section 14.03* and all applicable requirements of this Ordinance.

Deleted: Article VII

(E) **Uses That May Be Permitted (currently Section 8.3.4).** The following uses of land and structures may be permitted within planned unit developments:

(1) Single family dwellings.

(2) Two-family dwellings.

(3) Attached single-family residential housing, such as group housing, row houses, garden apartments, or other similar housing types which can be defined as single-family dwelling with no side yards between adjacent dwelling units, subject to *Section 6.08*.

Deleted: G

Deleted: Provided that there shall be no more than eight (8) dwelling units in any contiguous group

(4) Open space according to *Section 5.01(H)*. In addition to the uses permitted in *Section 5.01(H)*, the following land uses may be set aside within the open space as common land for open space or recreation use under the provisions of this Section:

Deleted: ,

Deleted: provided that only

(a) Private recreational facilities (but not golf courses) such as pools, or other recreational facilities which are limited to the use of the owners or occupants of the lots located within the planned unit development.

(b) Historic building sites or historical sites, public and/or private parks and parkway areas, ornamental parks, extensive areas with tree cover, low lands along streams or areas of rough terrain when such areas have natural features worthy of scenic preservation.

(c) Commonly owned agricultural lands.

(5) Deed restricted Agricultural lands.

Deleted: <#>Signs as allowed by *Article 11*.¶
¶

(6) Garages and accessory buildings and uses exclusively for the use of residents of the planned unit development and for the proper maintenance thereof.

(F) **Uses Permitted by Special Use Permit (currently Section 6.5A.2).** Planned unit developments are subject to all requirements of uses and standards established for the corresponding conventional district described respectively *Article 3*,

Deleted: Article VII, Section 8.1 and 8.3 and

Deleted: in Article VI, Section 6.2, 6.3, 6.4 and 6.5

(G) **Lot Size Variation Procedure (currently Section 8.3.5).** The lot area for Planned Unit Developments within Residential and Agricultural Districts may be reduced from those sizes required by the applicable zoning district within which said development is located by compliance with the following procedures:

(1) **Parallel Plan.** The number of dwelling units permitted in a PUD shall be based on a parallel plan prepared by the applicant. The parallel plan shall be consistent with State, County, and Township requirements for a tentative preliminary plat, shall meet the

requirements of the underlying zoning district for lot area, lot width, setbacks, public roads, and shall provide an area that conceptually would provide sufficient area for storm water detention. Lots in the parallel plan shall provide sufficient building envelope area to permit the construction of a conforming house without impacting the area of any regulated wetland. The parallel plan must demonstrate a realistic and reasonable development plan based on regulated environmental constraints, availability of utility and other necessary public infrastructure such as roads. A parallel plan does not constitute a formal site plan and shall not be submitted for site plan approval while the applicant is in the process of requesting that a PUD be approved.

During preliminary site plan review of the PUD, the Planning Commission shall review the parallel plan and determine the number of units that could feasibly be constructed on the site following conventional design standards. This number shall be the number of dwelling units permitted in the PUD.

(2) **Maximum Number of Lots and Dwelling Units.** After the parallel plan has been accepted by the above procedure and the maximum number of lots and/or dwelling units that may be approved within a planned unit development have been computed, individual lots may be reduced in area below the minimum lot size required by the zone district in which the planned unit development is located, provided that the total number of dwelling units and/or lots created within the development is not more than the maximum number that would be allowed under the parallel plan. Units may be distributed without regard to district boundaries.

(3) **Permissive Building Envelope.** Building Envelope shall be as shown on the Site Plan and not included as open space. The Township may approve front, side, and rear yard setbacks that are less than the required setbacks the underlying zoning district.

(4) **Permissive Minimum Lot Area.** Minimum Lot Area shall be as determined by the Township Board and shown on the Site Plan.

(5) **Maximum Permissive Building Height.** 2.5 stories but not exceeding 35 feet. Accessory buildings shall not exceed a height of 15 feet. Provided that the height of agricultural buildings may be increased pursuant to *Section 7.08(B)*.

(H) **Open Space and Periphery Setbacks (currently Section 8.3.6 and Section 7.2.6)**

(1) **Open Space.** The Township Board shall utilize one of the following 4 options for dedication of the provided open space:

(a) **Open Space Dedicated for Private Use.** A residential planned unit development with a minimum of 65 percent of the net acreage kept as open space and owned by the Home Owners Association or Condominium Association. That open space land shall be set aside as common land for the sole benefit, use and enjoyment of present and future lot or home owners within the development and may be used for passive recreation and wildlife corridors.

Deleted: Site Acreage Computation. The net acreage proposed for a planned unit development shall be computed to determine the total land area available for development into lots under the minimum lot size requirements of the applicable zoning district in which the proposed planned unit development is located.¶
¶
Lands below the Ordinary High Water Mark shall not be considered as part of the net acreage.¶
¶
Street rights-of-way shall be included in net acreage provided the property legal description includes the right-of-way. (REVISED BY AMENDMENT 158)¶

Deleted: net acreage

Deleted: determined

Deleted: ,

Deleted: shall be

Deleted: by subtracting from the net acreage a fixed percentage of said total for street right-of-way purposes, and dividing the remainder by the minimum lot area requirement of the zoning district in which the planned unit development is located.¶
<#>¶
<#>The fixed percentages for street right-of-way purposes to be subtracted from the net acreage shall be fifteen (15) percent for the R-1A and R-1B residential districts, twenty (20)percent for the R-1C district and thirty (30) percent for multiple family development in the R-1D district. These percentages shall apply regardless of the amount of land actually required for street right-of-way.¶
<#>¶
Under this procedure

Deleted: if the project were developed under the minimum lot area requirements of the applicable zone district or districts in which it is located

Deleted: four

Deleted: %

(i) Such open space shall be conveyed by proper legal procedures from the project owner or owners to a home owners association or other similar non-profit organization.

Deleted: (REVISED BY AMENDMENT 170)

(ii) Documents providing for the maintenance of said land and any buildings thereon to assure that open space land remains open shall be provided to the Township Board for its approval.

(iii) The access and characteristics of the open space land are such that it will be readily available and desirable for the use intended.

(b) Open Space Dedicated for Public Use. A Residential Planned Unit Development wherein the developer voluntarily dedicates a minimum of 10 percent of the net acreage to the Township. That open space land shall be dedicated to the Township for park or recreational purposes by the project owner or owners provided that the Township Board makes the following determinations:

Deleted: with

Deleted: %

Deleted: dedicated

(i) The location and extent of said land is not in conflict with the Master Plan of Peninsula Township.

(ii) The access to and the characteristics of the open space land is such that it will be readily available to and desirable for the use intended.

(c) Open Space Dedicated for Deed Restricted Agricultural Land. A Planned Unit Development with a minimum of 65 percent of the net acreage as deed restricted agricultural land. That open space shall be retained in agricultural use as specified on the site plan with the following conditions:

Deleted: %

(i) The Land shall be used exclusively for farming purposes.

(ii) A conservation easement shall be granted to Peninsula Township that restricts uses to those that are allowed on deed restricted agricultural land subject to conservation easements purchased by Peninsula Township pursuant to the Purchase of Development Rights Ordinance No. 23.

(iii) A farmstead parcel consisting of a residence for the owner or operator of the farm along with any or all of the following outbuildings may be shown on the site plan if approved by the Township Board:

a. Barns existing or proposed for uses necessary for agricultural production.

b. Outbuildings existing or proposed for storage of machinery and equipment used for agricultural production.

If a farmstead is shown on the site plan it shall be counted as one of the allowed dwelling units in the planned unit development.

(iv) The deed restricted agricultural land may be sold separately from the dwelling parcels.

(v) The Township may permit the deed restricted agricultural land to be located off-site in Peninsula Township, provided the deed restricted agricultural land is of high quality, a parallel plan is approved for the deed restricted agricultural land per *Section 5.01(G)(1)*, and that the density on the buildable site is acceptable to the Peninsula Township Planning Commission and Township Board.

(d) Open Space Apportioned Between Private Use and Deed Restricted Agricultural Land. The Township Board may approve open space apportioned between Private Use and Deed Restricted Agricultural Land described in *Section 5.01(H)(1)(a)* and *Section 5.01(H)(1)(c)* above provided, that in addition to the provisions of *Section 5.01(H)(1)(a)* and *Section 5.01(H)(1)(c)* above, the Deed Restricted Agricultural Land portion:

(i) Shall be a minimum of 5 acres.
(ii) Shall be viable farmland as determined by the Township Board.
(iii) No buildings shall be allowed except as permitted in *Section 5.01(H)(1)(a)* and *Section 5.01(H)(1)(c)* above.

(2) Periphery Setbacks.

(a) Intent. It is the intent of this Ordinance that residential developments other than conventional subdivisions be designed, constructed, operated and maintained so as to be harmonious and appropriate in appearance with the existing or intended character of the general vicinity of the township in which they are located, and that such a use will not change the essential character of the area in which it is proposed. In as much as planned unit developments and attached single-family housing developments may involve higher densities of land use, abut agricultural land, or have building types that distinctly differ from the single-family, conventionally-built dwellings which predominate the Township, periphery setbacks for such developments are established.

(b) General Periphery Setbacks. All buildings including single-family dwellings and mobile homes within a planned unit development, attached single-family residential housing development, or a mobile home park development shall be placed at least 50 feet from any public right-of-way line for existing roadways bordering a site, and at least 30 feet from any development boundary line which is not a public road right-of-way. Periphery setback spaces shall be occupied by plant materials and appropriately landscaped. The Township may require that attached single-family residences be setback farther from the public road right-of-way of an existing roadway where a larger setback is desired to buffer the use from the road.

(c) Setback from Agricultural Areas. Planned unit developments abutting agricultural areas shall meet the setback requirements of *Section 7.09*.

(I) Maximum Percentage of Lot Area Covered by All Structures (currently Section 8.3.7)

Commented [PS33]: This is an introduction to a Transfer of Development Rights (TDR) Program. Please note that this is optional for the Township and that TDR, as it is currently proposed, will not increase the overall density within the Township. TDR is simply another tool for preserving non-contiguous agricultural land.

Deleted: *(1)*
Deleted: (3)
Deleted: (1)
Deleted: (3)
Deleted: five
Deleted: *Irrespective of*
Deleted: (3)
Deleted: ; no buildings shall be allowed
Deleted: , mobile home parks
Deleted: other group
Deleted: may
Deleted: a group housing
Deleted: fifty (
Deleted:)
Deleted: thirty (
Deleted:)
Deleted: Setback

(1) The maximum percent of lot area covered by all structures shall not exceed 15 percent of net acreage.

(2) A Building Envelope within which structures may be located shall be shown on the site plan for all existing or future structures.

(3) The maximum number of square feet to be covered by all structures for each building envelope shall be shown on the site plan or attached to it.

(J) PUD Agreement (currently Section 8.3.8). The applicant shall record a PUD Agreement with the Register of Deeds containing the legal description of the entire project, specifying the date of approval of the special use permit, and declaring that all future development of the planned unit development property has been authorized and required to be carried out in accordance with the approved special use permit unless an amendment thereto is duly adopted by the Township upon the request and/or approval of the applicant, or applicant's transferee and/or assigns. The PUD Agreement shall be in accordance with *Section 7.02(B).*

(K) Review Procedures and Development Standards. A PUD application shall follow all applicable review procedures of *Section 14.02* and *Section 14.03*. Additionally, a PUD application shall meet the development standards and review procedures of its development type (e.g., site condominium, subdivision, etc.).

Deleted: fifteen (

Deleted:)

Deleted: Affidavit

Deleted: an affidavit

Deleted: register

Deleted: deeds

Section 5.02 Site Condominiums (Currently Section 6.9)

(A) Intent (currently Section 6.9.1). It is recognized that Michigan statutes provide for the implementation of developments consisting of one-family detached residential dwelling units and sites through procedures other than those enabled by the Subdivision Control Act (Act 288 of 1967, as amended). The intent of this section is to provide procedures and standards for the review and approval or denial of one-family residential subdivisions implemented under the provisions of the Condominium Act (Act 59 of 1978, as amended) and to insure that such developments are consistent and compatible with conventional one-family platted subdivisions and promote the orderly development of the adjacent areas. It is not intended that commercial or industrial condominium projects will be reviewed or approved.

(B) General Provisions (currently Section 6.9.2). For the purpose of this section, a Site Condominium Subdivision shall include any residential development in a residential or agricultural district proposed under the provisions of the Condominium Act (Act 59 of 1978, as amended) consisting of 2 or more single family detached residential structures on a single parcel, with the exception that the provisions of this section limiting condominium subdivisions to single family detached structures shall not apply to condominium developments which are reviewed and approved through the Special Use Permit - Planned Unit Development option.

Deleted: two (

Deleted:)

Deleted: Section

Deleted: 6.9.2

(C) Initial Information (NEW SECTION). Concurrently with notice required to be given to Peninsula Township pursuant to Section 71 (notice of proposed action) of Public Act 59 of 1978, as amended (the Condominium Act), a person, firm or corporation intending to development shall provide the following information:

Deleted: ¶
<#>¶

(1) The name, address and telephone number of:

(a) All persons, firms or corporation with an ownership interest in the land on which the condominium development will be located together with a description of the nature of each entity's interest (for example, fee owner, optionee or land contract vendee).

(b) All engineers, attorneys, architects, or registered land surveyors associated with the project.

(c) The developer or proprietor of the condominium development.

(2) The legal description of the land on which the condominium project will be developed together with appropriate tax identification numbers.

(3) The acreage content of the land on which the condominium development will be developed.

(4) The purpose of the development (for example, residential, commercial, industrial, etc.).

(5) Appropriate number of condominium lots to be developed on the subject parcel.

(6) A description of the community water system, if one is to be to be provided as part of the condominium project.

(7) A description of the community septic system, if one is to be provided as part of the condominium project.

(8) A topographic survey of the land on which the condominium project will be developed.

(9) Any other information deemed necessary by the Planning Director.

(D) Required Plans, Conditions, and Improvements for New Projects (currently part of Section 6.9.3)

(E) Condominium Lots. The Site Condominium Subdivision Plan shall indicate specific parcel dimensions with front, rear and side condominium lot lines allocated to each condominium dwelling unit. For the purpose of this section and to assure compliance with the provision herein, these parcels shall be referred to as condominium lots. The description, size, location and arrangement of the condominium lots shall conform to the requirements of a conventional platted subdivision and the Land Division Ordinance. All condominium subdivision lots shall be deeded as limited common elements for the exclusive use of the owners of the condominium subdivision units.

(1) **Area and Bulk Requirements.** Each condominium dwelling unit shall be located within a condominium lot.

(a) The minimum size condominium lot per dwelling unit, maximum dwelling unit height, minimum yard setbacks, minimum elevational width of principal structure, and maximum percentage of condominium lot area covered by all structures shall conform with the requirements of the zoning district in which located, and to *Article 4*.

(b) Condominium lots shall back into such features as primary roads, except where there is a marginal access road, unless a secondary access is provided. Such condominium lots shall contain a landscaped easement along the rear at least 20 feet wide to restrict access to the primary road, to minimize noise, and to protect outdoor living areas.

(c) Double frontage condominium lots shall be prohibited except where the rear yard abuts a major road and does not take access from the major road.

(d) Unless the circumstances are such that the land area is not of sufficient size to develop secondary roads, all condominium lots shall front on secondary roads and condominium lots along M-37, Center Road, Peninsula Drive, Bluff Road, Montague Road and East Shore Drive shall be back up lots.

(e) All condominium lots shall front upon a public road or private road. Variances may be permitted in an approved planned unit development.

Commented [PS34]: The deleted items are either redundant or are not required by the Land Division Ordinance.

Deleted: ¶
<#>The condominium lot size and the required setbacks shall be measured from the designated front, rear and side condominium lot lines.¶
¶
<#>Side condominium lot lines shall be essentially at right angles to straight roads and radial to curved roads.¶
¶
<#>Narrow deep condominium lots shall be avoided. The depth of a condominium lot generally shall not exceed two and one-half (2-1/2) times the width as measured at the building line.¶
¶
<#>Corner condominium lots shall have extra width to permit appropriate building setback from each road, or orientation to both roads.¶

Deleted: twenty (

Deleted:)

Deleted: Condominium

Deleted: extending through a block and having frontage on two local roads

Deleted: , private road

Deleted: frontage

(2) Streets. If a condominium subdivision is proposed to have private streets, they shall be designed to at least the minimum design, construction, inspection, approval and maintenance requirements of this Ordinance. All public streets within a condominium subdivision shall be constructed as required by the Grand Traverse County Road Commission.

(3) Water Supply and Sewage Disposal Systems. Water Supply and Sewage Disposal Systems shall comply with the requirements of Section 5.4 REQUIRED IMPROVEMENTS: Section 5.4.4 WATER SUPPLY, and Section 5.4.5 SANITATION SEWER SYSTEM: of the Peninsula Township Subdivision Control Ordinance No. 8.

(4) Street Trees. There shall be a minimum of 1 tree per condominium lot with a frontage of 70 feet or less, or a minimum of 2 trees per condominium lot with a frontage of more than 70 feet. At least 3 trees shall be provided for a corner condominium lot. The species and location of street trees shall comply with the requirements of Section 5.4.7 STREET TREES: of the Peninsula Township Subdivision Control Ordinance No. 8.

(5) Accessory Structures. Accessory structures to serve all unit owners in a condominium shall be allowed within the general common elements provided the accessory structure is shown on the site plan, and provided further:

(a) Each structure is no more than 200 square feet in area provided the total percent of the condominium parcel covered by all structures does not exceed the maximum amount allowed in the zoning district;

(b) The site plan includes the maximum area to be covered by all structures for each condominium lot and for the general and the limited common elements.

(c) The structure height is no greater than 15 feet;

(d) The structure meets the underlying zoning district setbacks from the property lines of the condominium project.

(e) The structure is located within the General Common Elements of the Condominium;

(f) The structure and its proposed use(s) is shown on the site plan approved or amended by the Township and receives a Land Use Permit from the Zoning Administrator prior to construction.

(g) The use of the structure shall be for one or more of the following uses.

(i) Recreational. Deck, gazebo, bus shelter or picnic shelter.
(ii) Utility. Storage of maintenance or recreation equipment or trash enclosures.

(6) Wetland and Floodplain Restrictions. There shall be no development or modification of any kind within a wetland or floodplain area without there first having been issued a wetlands permit by the Department of Environmental Quality and/or an Earth Change

Deleted: one (
Deleted:)
Deleted: interior
Deleted: seventy (
Deleted:)
Deleted: two (
Deleted:)
Deleted: seventy (
Deleted:)
Deleted: three (
Deleted:)
Deleted: 8
Deleted: (ADDED BY AMENDMENT 163)
Deleted: unit
Deleted: Board
Deleted: Natural Resources

Permit from Grand Traverse County as appropriate. Lands subject to high organic content soils, high water table, flooding or otherwise deemed by the Planning Commission to be uninhabitable shall not be used for residential purposes, or for uses that may, in the judgment of the applicable Federal, State, County, Local, or Township agency, increase the danger to health, life, or property or increase the flood hazard. Such land within a condominium subdivision shall be set aside for other uses, such as parks or other open space.

Deleted:

Deleted: Planning Commission

(7) **Removal of Fruit Trees.** When an area having existing fruit producing trees, vines or shrubs, is approved for a condominium subdivision, the owner of the property shall remove and destroy all such trees, shrubs and vines before final approval of the condominium subdivision plan pursuant to *Section 8.03*.

(8) **Plans Required for the Control of Erosion and Sedimentation.** In the event that any developer shall intend to make changes in the contour of any land proposed to be developed, or changed in use by grading, excavating or the removal or destruction of the natural topsoil, trees, or other vegetative covering thereon, the same shall only be accomplished after the owner of said land or his agent has submitted to the Planning Commission for approval a plan for erosion and sedimentation controls, unless there has been a prior determination by the Planning Commission that such plans are not necessary. Such plans shall contain adequate measures for control of erosion and siltation, where necessary, using the guidelines and policies contained in Section 5.4.12 PLANS REQUIRED FOR THE CONTROL OF EROSION AND SEDIMENTATION: of the Peninsula Township Subdivision Control Ordinance No. 8.

Deleted: 13

(9) **Setback from Agricultural Areas.** Site condominiums abutting agricultural areas shall meet the setback requirements of *Section 7.09*.

(F) **Required Plans for Expandable or Convertible Projects (NEW SECTION).** Prior to expansion or conversion of a condominium development to additional land, the new phase of the project shall undergo site plan review and approval pursuant to *Section 14.02* of this Ordinance. The conversion of any development to condominium form of ownership shall require all standards and requirements of this Ordinance regarding condominiums to be met.

(G) **Plan Application and Information required (currently Section 6.9.4).** The proprietor shall submit a written application to the Township Zoning Administrator for approval of the Condominium Subdivision Plan and also the fee established by the Township Board for review of such plans.

(H) **Master Deed, Restrictive Covenants, "As Built" Survey, and Association Bylaws to be furnished (currently part of Section 6.9.4.1).** The condominium subdivision developer shall submit to the Township Zoning Administrator 11 copies of the condominium subdivision plan and proposed protective covenants and deed restrictions which would meet the requirements of Section 112(1) and 113 to 119 of the Subdivision Control Act. The name of the proposed project shall be subject to the approval of the Township to eliminate duplicate names or names that are similar to existing developments.

Deleted: eleven (

Deleted:)

(1) Size and Sale. The condominium subdivision plan may be on paper and shall be not less than 24 inches by 36 inches, at a scale of at least 1 inch to 100 feet showing the date and north arrow.

(2) Information Required. The following shall be shown on the condominium subdivision plan or submitted with it:

Deleted: .

(a) The name of the proposed condominium subdivision.

(b) Names, addresses and telephone numbers of the proprietor and the surveyor preparing the plan.

(c) Location of the condominium subdivision, giving the name of the township and county.

(d) Legal description of the property.

(e) The names of property owners, zoning, and use of abutting lands.

(f) Statement of intended use of the proposed condominium, such as, residential single family, two-family and multiple housing. Also, any sites proposed for parks, playgrounds, schools, or other public uses.

(g) A map of the entire area scheduled for development and all contiguous land owned by the proprietor, if the proposed plan is a portion of a larger holding intended for subsequent development.

(h) A location map showing the relationship of the proposed plan to the surrounding area.

(i) The land use and existing zoning of the proposed condominium subdivision.

(j) Location, type, dimensions, and proposed use of all existing structures.

(k) Condominium lot lines and the total number of condominium lots by block.

(l) Contours shall be shown on the condominium subdivision plan at 5-foot intervals where slope is greater than 10 percent, and 2-foot intervals where slope is 10 percent or less.

Deleted: %,

Deleted: %

(m) A site report as described in the rules of the State of Michigan. The site report is required if the proposed condominium subdivision is not to be served by public sewer and water.

Deleted: Department of Public Health

(n) Proposed and existing storm and sanitary sewers, water mains and their respective profiles, or indicate alternative methods.

(o) Right-of-way easements, showing location, width, and purpose.

(p) The location and types of all significant existing vegetation, water courses and bodies, flood plains and water retention areas, and soil types.

(q) In the event soils or vegetation types indicate wetlands may be present, a wetlands determination by Michigan Department of Environmental Quality as to the existence of any wetlands on the property.

Deleted: Natural Resources

(r) A statement of deed restrictions and by-laws as applicable.

(I) Review Procedures (currently Section 6.9.5)

(1) Distribution to Authorities. The Zoning Administrator shall deliver the proposed condominium subdivision plan to the Planning Commission and Township Board for review. The Zoning Administrator shall retain one copy, send one copy each to the Peninsula Township Fire Chief; the Township Planner; and to Grand Traverse County Planning Commission for plan review.

(2) Staff Review. The Township Planner shall send recommendations to the Planning Commission at least 10 days prior to Planning Commission review as provided for in *Section 5.02(I)(3)*.

Deleted: ten (

Deleted:)

(3) Planning Commission.

(a) The Planning Commission shall review the condominium subdivision plan and the reports of the County Road Commission, the County Drain Commissioner/Soil Erosion Officer, County Health Department, and County Planning Commission, and Planning Director.

Deleted: Township Planner

(b) The Planning Commission shall hold a public hearing on the proposed condominium subdivision plan.

(c) If following the review and public hearing prescribed above, the Planning Commission determines that the proposed plan meets all requirements of this Ordinance, the Planning Commission shall send notice of action taken with comments to the Township Board.

(d) If the condominium subdivision plan does not meet all requirements, the Planning Commission shall recommend disapproval of the plan by the Township Board, it shall state its reason in its official minutes and forward same to the Township Board, and recommend that the Township Board disapprove the condominium subdivision plan until the objections causing disapproval have been changed to meet with the approval of the Planning Commission.

(4) Township Board.

(a) The Township Board shall not review, approve or reject a condominium subdivision plan until it has received from the Planning Commission its report and recommendations.

(b) The Township Board shall consider the condominium subdivision plan at its next meeting after receipt of the recommendations from the Planning Commission.

(c) The Township Board shall either approve the condominium subdivision plan, reject the plan and give its reasons, or table the proceedings pending changes to the plan to make it acceptable to the Board.

(J) Conditions and Duration of Approval (currently Section 6.9.6.1 and 6.9.6.2)

(1) Conditions. The approval of the Township Board will indicate that the proposed condominium subdivision plan meets the provisions of section 141. (1) of the Condominium Act relating to the ordinances and regulations of Peninsula Township, but does not cover additional permits that may be required after the Master Deed has been recorded.

(2) Duration. Approval of the condominium subdivision plan of phase thereof by the Township Board shall be for a period of 1 year from the date of its approval by the Township Board pursuant to *Section 1.01(A)*. The Township Board may extend the 1 year period if applied for and granted in writing but only concerning its own requirements.

Deleted: one

Deleted: one

(K) Monuments Required (NEW SECTION). All condominium developments which consist in whole or in part of condominium lots which are building sites, mobile home sites or recreational sites shall be marked with monuments as provided in this subsection.

(1) All monuments used shall be made of solid iron or steel bars at least ½ inch in diameter and 36 inches long and completely encased in concrete at least 4 inches in diameter.

(2) Monuments shall be located in the ground: at all angles in the boundaries of the condominium development; at the intersection lines of streets; at the intersection of the lines of streets with the boundaries of the condominium development; at the intersection of alleys with the boundaries of the condominium development; at all points of curvature, points of tangency, points of compound curvature, points of reverse curvature and angle points in the side lines of streets and alleys; and at all angles of an intermediate traverse line. It is not intended or required that monuments be placed within the traveled portion of a street to mark angles in the boundary of the condominium development if the angle points can be readily re-established by reference to monuments along the sidelines of the streets.

(3) If the required location of a monument is in an inaccessible place or where the locating of a monument would be clearly impracticable, it is sufficient to place a reference monument nearby and the precise location thereof be clearly indicated on the plans and referenced to the true point.

(4) If a point required to be monumented is on a bedrock outcropping a steel rod, at least ½ inch in diameter shall be drilled and grouted into solid rock to a depth of at least 8 inches.

(5) All required monuments shall be placed flush with the ground where practicable.

(6) All unit corners and the intersection of all limited common elements and all common elements shall be identified in the field by iron or steel bars or iron pipe at least 18 inches long and ½ inch in diameter or other approved markers.

(7) The Township Planning Director may waive the placing of any of the required monuments and markers for a reasonable time, not to exceed 1 year on the condition that the proprietor deposits with the Township cash, a certified check, or irrevocable bank letter of credit to Peninsula Township, whichever the proprietor selects in an amount to be established by the Board, by resolution. Such cash, certified check, or irrevocable bank letter of credit shall be returned to the proprietor upon receipt of a certificate by a surveyor that the monuments and markers have been placed as required within the time specified.

(L) **Compliance with Federal, State, and Local Law (NEW SECTION).** All condominium development shall comply with Federal and State statues and local Ordinances.

(M) **Subdivision of Condominium Lots (NEW SECTION).** All subdivisions of individual condominium lots shall conform to the requirements of this ordinance for minimum lot width, lot area, and building setback requirements, for the district in which the site condominium project is located, and these requirements shall be made part of the bylaws and recorded as part of the master deed.

(N) **Encroachment Prohibited (NEW SECTION).** Encroachment of one condominium lot upon another, as described in section 40 of the Condominium Act, shall be prohibited by the condominium bylaws and recorded as part of the master deed.

(O) **Relocation of Boundaries (NEW SECTION).** The relocation of boundaries, as described in section 48 of the Condominium Act, shall conform to all setback requirements of this ordinance for the district in which the project is located, shall be approved by the zoning administrator, and this requirement shall be made part of the bylaws and recorded as part of the master deed.

(P) **Performance Guarantee (NEW SECTION).** The Township Director of Planning may allow occupancy of the condominium development before all improvements required by this Ordinance are installed provided that cash, a certified check, or an irrevocable bank letter of credit is submitted sufficient in amount and type to provide for the installation of improvements before the expiration of the temporary occupancy permit without expense to the Township. The expiration date of a temporary occupancy permit shall be as determined by the Planning Director upon issuance of the permit.

(Q) **Final Documents to be provided (NEW SECTION).** After submittal of the condominium plan and bylaws as part of the master deed, the proprietor shall furnish to the Township a copy of the site plan on 24-inch by-36 inch sheets and in a digital format acceptable to the Township.

Article 6 Standards Applicable to Specific Uses

Section 6.01 Adult Foster Care, Small Group Home (currently Section 8.7.3(9))

Adult Foster Care Small Group Homes shall meet the following requirements:

(A) Such uses shall be duly licensed by the State of Michigan.

(B) A maximum of 12 adults may receive foster care at any one time.

(C) The minimum lot size shall be 5 acres.

(D) Such facilities shall be allowed only in areas which are and will remain free from concentrations of objectionable airborne chemical sprays and similar materials utilized by agricultural operations within close proximity.

(E) Such facilities shall be located where adult foster residents will be safe from traffic and other hazards.

Section 6.02 Barn Storage (currently Section 6.7.2(18))

(A) The intent of this use is to help make it economical for farmers to keep and maintain barns that might otherwise may be allowed to decay because they are obsolete. Barn Storage shall not be a Self Service Storage Facility use (see *Section 6.33*) where there is regular access to the rental space by owners of the stored materials.

(B) It is prohibited for a property owner to build a barn just for rental storage, or to rent storage in a barn and then build a similar structure for farm use.

(C) The zoning administrator may issue a land use permit for rental of storage space in barns for boats, campers, farm equipment or similar items in barns in the Agricultural A-1 District, provided:

(1) The barn has been previously used for the storage of agricultural crops or for housing of livestock;

(2) The barn has been in existence in its present form for not less than 20 years prior to the application for a land use permit for this use;

(3) The zoning administrator has determined that the barn is no longer used for farm purposes because of farm consolidation or changes in operations; and

Deleted: Facilities

Deleted: Facilities

Deleted: within the Agricultural District.

Deleted: Department of Social Services

Commented [PS35]: The Michigan Adult Foster Care Licensing Act defines "Family Homes" up to 6 residents and "Small Group Homes" up to 12 residents. Therefore, if the Township approves a Small Group Home, it must allow up to 12 residents per the State license.

Deleted: ten (10

Deleted:)

Deleted: five (

Deleted:)

Deleted: It is not intended to

Deleted: self

Deleted: -

Deleted: s

Deleted: not intended to allow

Deleted: .

Deleted: twenty (

Deleted:)

(4) The barn is not increased in size or the exterior modified for the use, however, doors or the interior may be modified if necessary to make the barn suitable for storage.

(5) The rental of storage space in a barn shall be discontinued if a new barn is constructed for a use that can be accommodated in the old barn.

(6) The Zoning Board of Appeals may grant a variance from the minimum 20-year requirement, provided the Zoning Board of Appeals determines that the request is consistent with the intent of this section to not allow a property owner to build a barn just for rental storage, or to rent storage in a barn and then build a similar structure for farm use.

Deleted: twenty (

Deleted:)

Section 6.03 Bed and Breakfast Establishments (currently Section 8.7.3(6))

Commented [PS36]: Proposed changes are per Amendment #190.

(A) Statement of Intent. It is the intent of this subsection to establish reasonable standards for Bed and Breakfast Establishments to assure that:

(1) The property is suitable for transient lodging facilities.

(2) The use is compatible with other uses in the residential and agricultural districts.

(3) Residential and agricultural lands shall not be subject to increased trespass.

(4) The impact of the establishment is no greater than that of a private home with overnight house guests.

(B) Development Standards. The following requirements for Bed and Breakfast establishments together with any other applicable requirements of this Ordinance shall be complied with:

(1) Minimum Lot Area. The minimum lot size shall be 1 acre.

Deleted: one (

Deleted:)

(2) Parking. Off-street parking shall be provided in accordance with *Section 9.02* and *Section 9.03* of this Ordinance.

Deleted: Sections 7.6.3

Deleted: 7.6.4

(3) Owner-Occupied and –Managed. The Bed and Breakfast Establishment shall be the principal dwelling unit on the property and shall be owner-occupied and have on-site owner-management when open for business.

Deleted: residence

Deleted: at all times

(4) Building Exits. The residence shall have at least 2 exits to the outdoors.

Deleted: two (

Deleted:)

(5) Maximum Number of Sleeping Rooms. No more than 3 sleeping rooms in the residence may be used for rental purposes.

Deleted: three (3)

(6) Maximum Number of Overnight Guests. Not more than 8 overnight guests may be accommodated at any time.

Deleted: eight (8)

(7) **Sleeping Rooms Part of the Dwelling.** The rooms utilized for sleeping shall be a part of a dwelling that has received an occupancy permit prior to the application for a Bed and Breakfast Special Use Permit.

(8) **Minimum Area of Sleeping Rooms.** The rental sleeping rooms shall have a minimum size of 100 square feet for each 2 occupants with an additional 30 square feet for each occupant to a maximum of 4 occupants per room.

(9) **Required Permits and Approvals.** The Bed and Breakfast Establishment owner shall furnish necessary permits or approvals required from the Grand Traverse County Health Department, Soil Erosion and Sedimentation Control Department, Road Commission, and all other applicable local, state, and federal regulating agencies.

(10) **Floor Plan.** The Township Board shall require that a floor plan drawn to an architectural scale of not less than 1/8 inch = 1 foot is on file with the Fire Department.

(11) **Guest Registry.** Each owner/operator of a Bed and Breakfast Establishment shall keep a guest registry which shall be available for inspecting by the Zoning Administrator, and police and fire officials at any time.

(12) **Maximum Length of Stay.** The length of stay for each registered guest shall not exceed 7 days within any 30-day period.

(13) **Additional Fencing and Screening.** In the event that the Township Board determines that noise generation may be disturbing to neighbors, or that the location of the establishment is in an area where trespass onto adjacent properties is likely to occur, then the Township Board may require that fencing and/or an evergreen planting buffer be installed and properly maintained.

(14) **Rental of Recreational Vehicles and Similar Equipment.** Rental or use of recreational vehicles, such as snowmobiles, ATVs, or similar vehicles, boats, and other marine equipment, by registered guests shall be prohibited.

(15) A special use permit shall not be granted if the essential character of a lot or structure within a residential or agricultural district, in terms of use, traffic generation or appearance will be changed substantially by the occurrence of the bed and breakfast use.

(16) **Food and/or Beverages Served.** Breakfasts shall be the only meals served registered guests.

Section 6.04 Child Care Center (NEW SECTION)

(A) **Licensing.** In accordance with applicable State laws, all child care centers shall be licensed by the State of Michigan and shall comply with the minimum standards outlined for such facilities.

(B) **Emergency care.** Each child care center employ a staff person with current CPR and first aid training and shall meet other State emergency care requirements.

Deleted: (REVISED BY AMENDMENT 143)

Deleted: one hundred (

Deleted:)

Deleted: two

Deleted: thirty (

Deleted:)

Deleted: four (

Deleted:)

Deleted: Proof of evaluation of the well and septic system by the Health Department and conformance to that agency's requirements shall be supplied by owner/occupant.

Deleted: "

Deleted: be

Deleted: seven (

Deleted:)

Deleted: thirty (

Deleted:)

Deleted: constructed

Deleted: , in conjunction with the operation of the establishment

Deleted: to transient tenants. (ADDED BY AMENDMENT 136)

(C) Hours of Operation/Care. Hours of operation may be up to 24 hours a day, with not more than 12 hours of continuous care at any time for any child.

(D) Separate building/parcel. Each child care center shall be located in its own distinct building and on its own separate parcel, except where proposed as accessory to an Institutional Use (*Section 6.18*), in which case it must be located entirely within the principal building exclusive of outdoor recreation areas as otherwise required.

(E) Outdoor recreation area. A minimum of 150 square feet of outdoor recreation area shall be provided and maintained per child, provide that the overall size of the recreation area shall not be less than 5,000 square feet. The outdoor recreation area shall be contiguous to and directly accessible from the building containing the child day care centers and shall not be separate from the building by parking, fire lane, or other vehicular circulation. The outdoor recreation area shall further be completely fenced and enclosed and shall be suitable screened from any adjoining residentially-zoned or -used land by a greenbelt as required in *Section 10.03*.

(F) Frontage. Child care centers shall have frontage onto a paved thoroughfare or collector road and shall have ingress and egress through the same.

(G) Setbacks. In addition to all other setback requirements of the district, child care centers shall have a minimum side yard setback of at least 25 feet.

Section 6.05 Child Care, Group Home (currently Section 6.2.2(7))

(A) Such uses shall be duly licensed by the State of Michigan.

(B) Location. In accordance with Public Act 110 of 2006, as amended, all facilities must not be located closer than 1,500 feet to any of the following:

(1) Another licensed group day care home,

(2) An adult foster care small group home or large group home as licensed under the Adult Foster Care Licensing Act, P.A. 281 of 1979, as amended.

(3) A facility offering substance abuse treatment and rehabilitation services to 7 or more people licensed under article 6 of the public health code, P.A. 368 of 1978, as amended.

(4) A community correction center, resident home, halfway house, or other similar facility which houses an inmate population under the jurisdiction of the Department of Corrections.

(C) Character. In accordance with Public Act 110 of 2006, as amended, all facilities must maintain the property consistent with the visible characteristics of the neighborhood.

(D) Hours of Operation. In accordance with Public Act 110 of 2006, as amended, a facility may not exceed 16 hours of operation during a 24-hour period.

Deleted: one hundred fifty (

Deleted:)

Deleted: five thousand (

Deleted:)

Commented [PS37]: Please note that the proposed side yard setbacks are greater than the general side yard setbacks of the district because the nature of a child care center use often requires additional setbacks from a lot line both for the benefit of the on-site use as well as the neighbors'.

Deleted: twenty-five (

Deleted:)

Deleted: State Department of Social Services

(E) Signs. In accordance with Public Act 110 of 2006, as amended, a facility's sign to identify itself must meet the applicable sign regulations of this Ordinance.

(F) Off-Street Parking. In accordance with Public Act 110 of 2006, as amended, a facility must meet applicable off-street parking regulations of this Ordinance.

(G) Fencing. A 4-foot high fence around the perimeter of all outdoor play areas shall be required in accordance with *Section 7.14*.

(H) Hours of Operation. The Township Board may, at any time, limit the operation of a group child care home during the hours of 10:00 p.m. and 6:00 a.m. without prohibiting the use during those hours should the Township receive any written complaints regarding operating hours.

Deleted: Fencing

Deleted: may

Deleted: should it be determined by the Zoning Administrator that conditions exist in the immediate vicinity which could be hazardous to the user children or that objectionable trespass could occur onto neighboring properties by the user children. The Zoning Administrator shall make such determination by contacting adjacent property owners by U.S. Mail and allowing a ten (10) day response time to receive comments from the neighbors regarding such probability.

Deleted: Zoning Board of Appeals

Deleted: hours of

Deleted: family day

Deleted: they

Section 6.06 Drive-Through Uses (NEW SECTION)

Drive-Through uses shall meet the following requirements:

(A) Drive-through uses shall be accessory to the principal use of the site.

(B) The entrance to or exit from any such use shall be located at least 100 feet from the intersection of any 2 streets.

(C) All such uses shall have direct ingress and egress through a paved major thoroughfare.

(D) All lighting or illuminated display shall not reflect onto any adjacent residential zoning district and shall meet the requirements of *Section 8.07*.

(E) The approving authority shall consider the proximity of the on-site use to existing places of congregation of children (e.g. schools) regarding traffic safety and sanitation.

Section 6.07 Dwelling, Single-Family Residential Detached (NEW SECTION)

(A) All single-family dwellings shall comply with the minimum square footage requirements of this Ordinance for the zone in which it is located.

(B) All single-family dwellings shall have a minimum width across front, side and rear elevations of 24 feet and comply in all respects with the building code. Where a dwelling is required by law to comply with any Federal or State standards or regulations for construction and where such standards or regulations for construction are different than those imposed by the building code, then and in that event such Federal or State standards or regulations shall apply.

(C) All single-family dwellings shall be firmly attached to permanent foundation constructed on the site in accordance with the building code and shall have a wall of the same perimeter dimensions as the dwelling and construct of such materials and type as required in the applicable building code for single-family dwellings.

(D) The single-family dwelling shall be connected to public sewer and water supply. Where public sewer and water is not available, the dwelling shall be connected to such private facilities approved by the local health department.

(E) The foregoing standards shall not apply to a mobile home located in a licensed mobile home park except to the extent required by State or Federal law, or otherwise specifically required in the Township Zoning Ordinance pertaining to such parks.

Section 6.08 Dwelling, Single-Family Residential Attached (NEW SECTION)

(A) Access. All site plans shall have 2 means of ingress and egress throughout the project to permit adequate circulation for safety equipment.

Deleted: two (

Deleted:)

(B) Public Parking.

(1) In all multiple projects of over 100 dwelling units, parking shall not be allowed along the main circulation drive.

(2) All parking lots must be a minimum of 62 feet in width and if through traffic is permitted through the lot, the width must be increased to 64 feet.

(C) Attached Garage Required. All units shall have an attached garage with an area no less than 480 square feet and so designed to enclose 2 standard private passenger cars. Such garage units shall have direct interior access from the living area. Each garage area shall be exclusively for the use of 1 dwelling unit. The garage space shall remain as a garage and shall not be converted to living space.

(D) Maximum Attached Units per Building and Building Length. The maximum number of dwelling units which may be attached in a single building is 8. Additionally, no building elevation shall have a dimension greater than 200 feet.

(E) Building Lines. There shall be no more than 2 continuous, attached dwelling units with the same building line. No building lines in any continuous attached row shall, when extended, be closer than 2 feet, measured perpendicularly, to any other such building line.

(F) Minimum Building Spacing. Minimum spacing between buildings shall be 20 feet when the 2 buildings are end to end or the closest wall are garage walls or dwelling unit sidewalls. In all other situations minimum separation shall be 40 feet.

(G) Minimum Setbacks from Roads and Pedestrian Ways. No building shall be closer than 30 feet to a public right-of-way or internal roadway, and no building shall be located closer than 20 feet to a pedestrian way.

(H) Outdoor Patio Areas. All dwelling units must be constructed to permit the development of an individual outdoor patio area not less than 100 square feet in area, either when the units are first developed or at some later date.

(I) Direct Outdoor and Common Area Access. All dwelling units shall have their main ingress/egress directly to the outdoors and a common area. Open porches, landings and stairs may be shared by more than 1 dwelling unit.

(J) Sidewalks. Sidewalks shall be provided parallel to all roadways whether public or private and shall further be provided to the satisfaction of the Planning Commission to allow for convenient and safe pedestrian traffic throughout the complex.

(K) Lighting. Lighting shall be provided to allow for a safe use of sidewalks during non-daylight hours and shall meet the requirements of *Section 8.07*.

(L) Common Areas. Common open areas shall be provided for the use and enjoyment of the residents within the development. This area shall be provided as set forth in this Ordinance. In the case of condominium development a limited common area may be created for each dwelling unit.

(M) Density and Dwelling Unit Size. The maximum density and minimum dwelling unit size shall meet the requirements of underlying zoning district.

(N) Attachment. No part of an attached single-family dwelling unit shall be located above or below another attached single-family dwelling unit. Attachment of the single-family dwelling units, one to another, may be through a common party wall or similar architectural barrier.

Section 6.09 Farming and Horticultural Use (currently Section 6.2.2(6))

Farming and horticultural use includes the carrying on of usual soil practices of cultivation, spraying and fertilization including the use of barnyard and poultry manure, and also including migrant workers' quarters and roadside stands for the sale of agricultural products, but excluding the raising and grazing of farm animals and fowl in residential districts excepting as permitted in *Section 6.21*.

Deleted: Including

Deleted: (5) above

Section 6.10 Food Processing Plants (currently 8.5)

(A) Authorization. The Township Board may authorize the construction, maintenance and operation in the Agricultural District of food processing plants related to local agricultural production, by the issuance of a special use permit, subject to the procedures and requirements of *Section 14.03* and provided that it has been demonstrated that the operation will not create any nuisance which will be detrimental to the health, safety and welfare of Township residents or adversely affect adjoining property owners.

(B) Statement of Intent. The intent of this section is to provide agricultural land owners within the Township an opportunity to produce, process, and wholesale their value-added products upon new or existing farm operations. This type of operation's intent is not to include the

retail sales of said product onsite, but does provide a land use where wine, beer, or other spirit related processing may take place.

(C) Eligibility Criteria. In order to establish a Food Processing Plant, the applicant shall demonstrate that the following site development standards have been met:

(1) Lot Area. The host parcel shall meet the minimum size requirements for an agricultural zoned parcel unless it is recognized as a legal non-conforming parcel of record.

(2) Setbacks. Structures utilized for any part of the production facility shall maintain the following minimum setbacks:

(a) Front. 50 feet.

(b) Side and Rear. 100 feet

(c) Minimum of 200 feet from a pre-existing residential structure on an adjacent property. Pre-existing agricultural structures may be utilized for a Food Processing Plan if the following regulations are met:

(i) The applicant can demonstrate that the proposed structure is in compliance with the standards of the Grand Traverse County Construction Code office, Health Department, Road Commission, and any other applicable permitting agencies.

(ii) The structure's location is in compliance with the underlying district's zoning setbacks.

(3) Parking, Lighting, Signage, and Landscaping. Parking, lighting, signage, and landscaping must comply with this Ordinance.

(4) Access. Access shall utilize road cuts and/or driveways which have been approved by an applicable transportation authority and must be located on a public road.

(5) Area of Use Not Counted as Required Open Space. The acreage dedicated for this Special Use shall not be used to satisfy acreage density or open space requirements for any other land use in the Township.

(D) Source of Produce. A majority of the produce processed shall be grown on the land owned or leased for the specific farm operation by the same party owning and operating the specific Food Processing Plant. Products shall be processed and packaged in the specific Food Processing Plant and in compliance with all applicable Federal and State laws.

(E) Data and Records. The owner of the specific Food Processing Plant shall annually provide data and records to the Peninsula Township Planning & Zoning Department showing compliance with the above regulations related to the source of produce. This documentation shall be supplied to the Township on a form provided by the Planning & Zoning Department.

(F) Natural Disaster Provisions. If crop conditions or natural disaster result in a shortage of locally-grown crop for a particular year, the Township Board may approve a larger proportion of produce grown off the land owned and leased for a specific farm operation by the same party owning and operating the farm operation for that particular year, provided that verification of such conditions are presented to the Township Board by a public organization representing the growers of northwest Michigan that is duly recognized by the Township Board. Processed products produced in such a year shall not exceed the highest volume produced in any of the preceding 5 years.

(G) Required Information. In addition to the site plan information requirements of *Section 14.02(B)*, the following information shall be submitted as a basis for judging the suitability of the proposed operation:

(1) A description of the operations proposed in sufficient detail to indicate the effects of those operations in producing traffic congestion, noise, glare, air pollution, fire or safety hazards, or the emission of any potentially harmful or obnoxious matter or radiation.

(2) Engineering and Architectural Plans for:

(a) The treatment and disposal of sewage and industrial waste or unusable by-products.

(b) The proposed handling of any excess traffic congestion, noise, glare, air pollution, water pollution, fire or safety hazards, or emission of potentially harmful or obnoxious matter or radiation.

(3) The proposed number of shifts to be worked and the maximum number of employees on each shift.

Section 6.11 Gasoline Stations and Automobile Service Stations (currently Section 8.8)

(A) Statement of Intent. Facilities to serve motor vehicles are of considerable importance within areas such as Peninsula Township where the basic mode of transportation is the automobile. It is the intent of this Section to exercise a measure of control over service station buildings and their sites, and to establish a basic set of standards which will minimize traffic congestion noise, glare, and safety hazards which are inherent in service station activity. This ordinance requires conformation to these standards before a building permit may be issued for a gasoline station and/or service station within the Commercial District; and, in addition, requires the issuance of a special use permit within C-l Districts which complies with the requirements of this Section.

(B) Uses that May be Permitted. Gasoline Stations and Automobile Service Stations, as defined in *Article 2*, PROVIDED such accessory uses and services are conducted within a completely enclosed building.

(C) Site Development Requirements. The following requirements for site development together with any other applicable requirements of this Ordinance shall be complied with:

Deleted: T

Deleted: <#>A site plan of the property showing the location of all present and proposed buildings, drives, parking areas, waste disposal fields, landscaping, plant materials, screening fences or walls, and other construction features which shall be proposed.¶
¶

Deleted: Article III

(1) Minimum Site Size. 25,000 square feet with a minimum width of 150 feet.

(2) Site Location. The proposed site shall have at least 1 property line on a major thoroughfare as defined herein or classified on the Master Plan for Peninsula Township.

(3) Building Setback. The service station building, or buildings, shall be set back 40 feet from all street right-of-way lines and shall not be located closer than 25 feet to any property line in a residential district.

(4) Access Drives. No more than 1 driveway approaches shall be permitted directly from any major thoroughfare nor more than 1 driveway approach from any other public street.

(a) Driveway approach widths shall not exceed 35 feet measured at the property line.

(b) Driveways shall be located as far from street intersections as practicable, but no less than 50 feet.

(c) No driveway or curb cut for a driveway shall be located within 10 feet of an adjoining property line.

(d) Any driveway giving access to a single street shall be separated from any other driveway by a landscaped island per *Section 10.03,* with a minimum dimension of 20 feet.

(5) Lighting. All lighting shall conform to the requirements of *Section 8.07*.

(6) Signs. Signs as allowed by *Article 11*.

(7) Off-Street Parking. As provided in *Article 9*.

Section 6.12 Golf Courses and Country Clubs (currently Section 8.7.3(4))

(A) Golf Courses and Country Clubs, other than golf driving ranges and miniature golf courses, are subject to the following conditions:

(1) Site Area and Access. The site area shall be 75 acres. For golf courses with more than 9 holes, the site shall be an additional 75 acres per each additional 9 holes. The site shall be so designed as to provide all ingress and egress directly onto or from a county primary roadway or state trunk line.

(2) Site Plan. A site plan of the proposed development shall be submitted and reviewed in accordance with *Section 14.02*. Such site plan shall indicate the location of service roads, entrances, driveways, and parking areas and shall be so designed in relationship to the major arterial that pedestrian and vehicular traffic safety is encouraged.

Deleted: Twenty thousand (20
Deleted:)
Deleted: one hundred fifty (
Deleted:)
Deleted: one (
Deleted:)
Deleted: Comprehensive Development
Deleted: forty (
Deleted:)
Deleted: twenty-five (
Deleted:)
Deleted: two (2)
Deleted:
Deleted: one (
Deleted:)
Deleted: thirty-five (
Deleted:)
Deleted: fifty (
Deleted:)
Deleted: ten (
Deleted:)
Deleted: two (2)
Deleted: s
Deleted: n
Deleted: twenty (
Deleted:)
Deleted: *Section 8.107*
Deleted: (REVISED BY AMENDMENT 175B)

Deleted: seventy-five (
Deleted:)
Deleted: or more
Deleted: nine
Deleted: of a golf course
Deleted: and

(3) **Development Standards.** Development features shall be shown on said site plans, including the principal and accessory buildings, structures, and parking areas, and shall be so located as to minimize any possible adverse effects upon adjacent property; all principal or accessory buildings and parking areas shall be not less than 200 feet from any property line of abutting residentially-zoned lands.

Deleted: two hundred (

Deleted:)

(4) **Swimming Pool.** Whenever a swimming pool is to be provided, said pool shall be located at least 100 feet from abutting residentially-zoned property lines and shall be provided with a protective fence 6 feet in height, and entry shall be by means of a controlled gate.

Deleted: one hundred (

Deleted:)

Deleted: six (

Deleted:)

Section 6.13 Greenhouses and Nurseries (Retail Sales) (NEW SECTION)

(A) **Site Area.** There shall be no maximum size limitation for a greenhouse structure. Lot coverage for all structures, including greenhouse structures, associated with such a use; however, shall not exceed 40 percent.

(B) **Structures.** All greenhouse structures shall conform in construction and design to the current accepted national industry standards for such structures, and shall be cleaned and maintained on a regular basis, including but not limited to a routine and spot replacement program for damaged, torn or faded materials and parts.

(C) **Wholesale Sales.** Wholesale sales of annual and perennial plants shall be permitted, provided that retail sales shall also be a principal component of the use of the site.

(D) **Fertilizer Applications and Other Similar Applications.** In addition to all environmental and performance requirements in this Ordinance, fertilizing and other similar application processes shall conform to all applicable Federal, State or other environmental guidelines.

(E) **Hours of Operation.** Operating hours of such uses shall be limited to normal business hours and may be permitted to vary dependent upon location, season and amount of daylight. All such limits shall be noted on the site plan.

(F) **Equipment Operation and Storage.** All mechanical or motorized equipment operated in conjunction with such uses shall be stored in an enclosed buildings or adequately screened from rights-of-way and adjacent residentially zoned or used properties. Unless part of a commercial agriculture operation, equipment shall be operated outdoors only between the hours of 7:00 a.m. and 9:00 p.m.

(G) **Merchandise and Material Storage.** Merchandise or materials shall be stored in an enclosed building or sufficiently screened from rights-of-ways and adjacent residentially-zoned or -used properties to minimize noise, odor, smoke, dust, visual, storm water runoff and other impacts. The Planning Commission may require screening by additional setbacks or buffering pursuant to *Section 10.03*. The only exceptions to this requirement shall be for planted or seasonal, ground- or bench-level, displays, subject to such terms as shall be designated and noted on and approved with the site plan and subject to such other requirements of this Ordinance as

may be applicable. Temporary sales and seasonal sales of holiday trees and similar items shall be subject to such other requirements of this Ordinance as may be applicable.

(H) Outdoor Stacks and Piles of Bulk Materials. Outdoor stacks and piles of bulk materials, including but not limited to soil, sand, mulch, peat moss and stones, as well as bagged and/or boxed items, shall not be located in front of principal building(s), shall not be located where visible from any right-of-way or residential district or use, shall not be located within any required rear or side yard setbacks, shall be enclosed on at least 3 sides by retaining walls or other permanent containment structures with concrete bases, shall be not greater than 6 feet in height and shall be covered at all times with material capable of minimizing smoke, dust, storm water runoff and other impacts. All outdoor stacks and piles shall be not greater than 6 feet in height, except materials may be stacked to a height of 14 feet provided the materials above 6 feet in height are packaged or wrapped, neatly stacked, not accessible to customers, and are on a rack designed to safely store the materials.

(I) Pedestrian and Vehicle Access. Sidewalks and off-street parking and loading areas, whenever located, shall at all times be kept clear and free of all merchandise, materials and use-related vehicles and equipment.

Section 6.14 Guest Houses (currently Section 6.2.2(2)(b))

A guest house detached from the dwelling shall not be permitted on the same lot with a single-family dwelling unless the lot has a width twice the normal width, and the guest house is so located as to be qualified as a single-family dwelling in its own right on one-half the width of the lot of the principal dwelling.

Section 6.15 Home Occupation (currently Section 6.2.3(2))

(A) The intent of this Section is to preserve the existing residential characteristics in individual neighborhoods while encouraging some home occupations. Peninsula Township's Master Plan calls for residential neighborhoods that provide for low impact, environmentally sensitive housing that preserves the quality of life currently enjoyed by its residents; consequently, home occupations allowed in these zones should not change the existing characteristics of a given neighborhood. In this regard, home occupations that emit noise, dust, odor or vibrations, discernable at property boundaries, are excluded. Other physical changes such as, retail sales made to the general public, increased light or glare or noticeably increased volume of traffic brought about by a home occupation that would exert a visible, physical impact on a given neighborhood shall not be allowed.

(1) Permit. A "Home Occupation Permit" shall be obtained from the Zoning Administrator prior to beginning a home occupation and shall be issued to the person conducting the home occupation and shall not run with the land. Such permit shall be revoked should the home occupation at any time not meet the provisions of this Ordinance. Any permit shall become null and void 1 year after issuing the permit unless the home occupation has been established and is operating.

(2) Allowable Uses Not Requiring a Permit. The following incidental uses are allowed and do not need a permit:

Deleted: master policy plan

Deleted: would be

Deleted: would

Deleted: one (

Deleted:)

(a) Garage Sales provided they occur not more than twice in any calendar year.

(b) Party Sales for the purpose of selling merchandise or taking orders are allowed.

(c) An Office in the residence is allowed provided there are no employees except family members living at the residence, and further provided that no customers or clients arrive at the residence.

(3) **Operator and Employees.** Home Occupations are permitted in residential structures when carried on by the residents of the dwelling along with up to 2 full time equivalent employees within either the dwelling or an accessory building.

(4) **Floor Area.** The area utilized for the Home Occupation shall not exceed 1/4 of the floor area of 1 story of the dwelling including attached garages and excluding porches and decks whether or not the dwelling or an accessory building is so utilized.

(5) **Outdoor Activities and Storage.** No outdoor activities nor outdoor storage in excess of those normally found in the immediate residential neighborhood shall be allowed in connection with a home occupation. The Zoning Administrator shall make such a determination prior to issuing a land use permit.

(6) **Environmental Impacts.** Home Occupation activities shall not discharge any odor or dust, nor shall any vibration, noise, glare be discernable at property boundaries and all lighting shall conform to the requirements of *Section 8.07*.

(7) **Large Deliveries Prohibited.** Home Occupations shall not be permitted if the occupation would normally have deliveries or pick-ups by semi-trailer.

(8) **Hazardous or Controlled Substances.** No hazardous or controlled substances or materials shall be used or stored on the premises unless prior approval is obtained from proper authorities.

(9) **Limited Sales.** No retail sales shall be permitted on the premises; however, incidental sales previously made off-premises or by phone or internet may be picked up at the premises. Direct sales of products off display shelves or racks is not allowed.

(10) **Parking.** No more than 4 vehicles shall be parked in the driveway at any given time except for personal or private activities. Parking spaces shall be provided so that no cars are parked on the lawn or on the shoulders of the road.

(11) **Instruction in a Craft or Fine Art Permitted.** The occupants of a residence may give instruction in a craft or fine art within the residence, provided that the other requirements of this section are met and a Home Occupation Permit is issued. Sales of incidental items related to the instruction are allowed.

(12) **Residential Character Preserved.** In no event shall the use of a building for a home occupation alter the residential character of the building nor shall it require external

Deleted: two (

Deleted:)

Deleted: one-fourth (

Deleted:)

Deleted: one (

Deleted:)

Deleted: such use

Deleted: (REVISED BY AMENDMENT 175B)

Deleted: ,

Deleted: four (

Deleted:)

Deleted: ,

alterations, construction or repair of any kind such as, converting a garage door into a store front with display windows, which is not customary to residential use.

(13) Garages. Existing garages shall be retained for inside parking of vehicles.

Section 6.16 Hotels, Motels, and Tourist Courts (currently 8.10)

(A) Statement of Intent. It is the purpose of this section to establish reasonable requirements for transient lodging facilities (excluding of bed and breakfast establishments) in the C-1, Commercial District. It is intended that those regulations will provide for such facilities in the Township that are appropriate in scale and location so as to not create undue traffic congestion, noise of other interference with the predominantly rural and residential character of the Township.

(B) Qualifying Conditions.

(1) Minimum Floor Area. Each guest room shall contain not less than 250 square feet of floor area.

(2) Maximum Guests Per Unit. The maximum number of guests per unit shall not exceed 5 persons.

(3) Minimum Lot Area. The minimum lot size shall be 5 acres with a minimum width of 300 feet.

(4) Maximum Lot Coverage. All buildings, including accessory buildings, shall not occupy more than 10 percent of the net area within property lines.

(5) Minimum Yard Dimensions. All buildings shall set back no less than 150 feet from any street line, and no less than 60 feet from any side or rear property line.

(6) Maximum Building Height. The maximum building height shall be 2.5 stories, and shall not exceed 35 feet.

(7) Site Screening. The site may be closed by open structure wood or wire fences along any yard line, but shall not exceed 6 feet in height. Shrubs and/or trees may be used to screen alone or in combination with structural screens. No screening shall in any way impair safe vertical or horizontal site distance for any moving vehicle. Screening at least 4 feet high shall be erected to prevent headlight glare from shining on adjacent residential or agricultural property. No screening shall be closer than 75 feet to any street line, except for headlight screening which shall not be closer than 30 feet.

(8) Lighting. All lighting shall conform to the requirements of *Section 8.07*.

(9) Accessory Uses. Uses such as swimming pools and other outdoor recreational uses, meeting rooms, restaurants, taverns or bars, and a caretaker's or proprietor's residence shall be permitted provided that these uses are located on the same site as the principal

Deleted: would not be

Deleted: (REVISED BY AMENDMENT 135)

Deleted: exclusive

Deleted: two hundred fifty (

Deleted:)

Deleted: five (

Deleted:)

Deleted: five (

Deleted:)

Deleted: three hundred (

Deleted:)

Deleted: ten percent (

Deleted: %)

Deleted: one hundred fifty (

Deleted:)

Deleted: sixty (

Deleted:)

Commented [PS38]: The current height limit of 28 feet will encourage flat roof hotels, which will not meet the character of the township. We recommend requiring the height to be the same at the C-1 district. Therefore, the proposed height would be 2.5 stories and 35 feet. By allowing a height the same as the C-1 district, better architectural quality can be achieved without the need for the applicant to seek a variance.

Deleted: two (

Deleted:)

Deleted: but

Deleted: to

Deleted: twenty-eight (28)

Deleted: six (

Deleted:)

Deleted: four (

Deleted:)

Deleted: seventy-five (

Deleted:)

Deleted: thirty (

Deleted:)

Deleted: *Section 8.107Section 8.107*

Deleted: (REVISED BY AMENDMENT 175B)

use to which they are accessory. Appropriate permits shall have been obtained from regulating County or State agencies.

(10) Well and Septic System. Proof of evaluation of the well and septic system by the Health Department and conformance to that agency's requirements shall be supplied by owner.

(11) Fire Safety.

(a) All transient lodging facilities shall conform to the Michigan State Construction Code sections regarding fire safety.

(b) An on-site water supply shall be available and meet the requirements of the Peninsula Township Fire Department.

(c) A floor plan drawn to an architectural scale of not less than 1/8 inch = 1 foot shall be on file with the Fire Department.

(d) Each operator of a transient lodging facility shall keep a quest registry which shall be available for inspection by the Zoning Administrator and police and fire officials at any time.

(e) Master keys for all rooms shall be available at all times.

(12) Fencing or Planting Buffer. In the event that the Township Board determines that noise generation may be disturbing to neighbors, or that the location of the establishment is in an area where trespass onto adjacent properties is likely to occur, then the Township Board may require that fencing and/or a planting buffer be constructed and maintained in addition to the requirements of *Article 10*.

(13) Rental of Recreational Equipment. Rental of snowmobiles, ATVs or similar vehicles, boats and other marine equipment, in conjunction with the operation of the establishment shall be prohibited.

(14) Activities and Outdoor Gatherings. Activities made available to guests shall be on the lot used for the facility. Outdoor gatherings of guests or other individuals shall be limited to 200 guests, and carried on in such a manner and at such hours as to not be disruptive to neighboring properties.

(15) Density of Development. The maximum number of rental units which may be developed at any single location shall be 20. Accessory uses shall be as approved as a part of the special use permit approval process.

(16) Parking. Parking shall meet the requirements of *Article 9.*

(17) Additional Requirements. Such developments shall meet the requirements of *Section 7.09(A)* and *Section 7.09(D)*.

Deleted: "

Deleted: or on lands under the direct control of the operator either by ownership or lease

Deleted: twenty (

Deleted:)

Deleted: (REVISED BY AMENDMENT 137B)

Section 6.17 Incinerators and Sanitary Landfills (currently Section 8.7.3(1))

Where permitted by Federal or State law, incinerators and sanitary landfills located in Peninsula Township shall meet the following requirements:

(A) All uses shall be established and maintained in accordance with all applicable State of Michigan statutes and requirements of the Health Department.

(B) All uses shall have a site rehabilitation plan approved by the Township. The rehabilitation plan shall include a plan for planting trees in a manner that will create a woodland over the long term, which will assist in slope stabilization and ground absorption rates.

(C) All uses shall be enclosed by a chain link fence 6 feet or more in height for the entire periphery of the property, with a staggered double row of 8-foot high evergreens spaced not more than 15 feet apart and planted outside of the fence.

Deleted: six (

Deleted:)

(D) All areas within any single development shall be rehabilitated progressively as they are worked out or abandoned so that they shall be in a condition of being entirely lacking in hazards, inconspicuous, and blended with the general surrounding ground form.

(E) The Planning Commission shall establish routes for truck movement in and out of the development in order to minimize the wear on public roads, to minimize traffic hazards, and to prevent encroachment of traffic, or the by-products of traffic (such as dust and noise), upon adjacent properties.

(F) All permitted installations shall be maintained in a neat, orderly condition so as to prevent injury to any single property and individual, or to the community in general.

Section 6.18 Institutional Structures and Uses (currently Section 8.6)

(A) **Authorization.** The Township Board may authorize the construction, maintenance and operation in any Residential or Agricultural district of certain institutional uses specified in this Section by the issuance of a special use permit, PROVIDED compliance is had with procedures and requirements in *Section 14.03*. Such institutional uses are limited to the following, viz:

(1) **Religious Institutions.** Churches or similar places of worship, including associated child care centers or day care centers (see *Section 6.04*), convents, parsonages and parish houses, and other housing for clergy.

(2) **Educational and Social Institutions.** Public schools (unless preempted by State law) and private schools, including associated child care centers or day care centers, auditoriums and other places of assembly, and centers for social activities. Provided private schools, child and day care centers (see *Section 6.04*) within the residential and agricultural zone district meet the following requirements:

(a) Such uses shall be duly licensed by the State of Michigan.

Deleted: Department of Social Services

(b) Fencing of outdoor play areas may be required should it be determined that conditions exist in the immediate vicinity which could be hazardous to the user children, or if the public hearing on the application for a special use permit indicates objectionable trespass could occur onto neighboring properties by the user children.

(c) The minimum lot size shall be 1 acre.

(3) Public Buildings and Service Installations. Publicly owned and operated buildings (except recreation buildings in conjunction with the uses permitted in *Section 6.28*) and public utility buildings and structures, transformer stations and substations, radio, television and micro-wave towers, and gas regulator stations. Wireless Communications towers and facilities shall not be considered Public Buildings or Service Installations for purposes of this Ordinance.

(4) Mission Point Lighthouse and Lighthouse Park. Retail sales shall be allowed in a gift shop located within the existing Mission Point Lighthouse, provided:

(a) Items sold shall be limited to merchandise relating to the Mission Point Lighthouse, Michigan lighthouses, and local history.

(b) The Township Board may authorize the sale of other items related to the lighthouse park.

(c) Net proceeds from the gift shop shall be placed in a designated fund to be used for operation and maintenance of the Mission Point Lighthouse and Lighthouse Park.

(d) No general funds may be used for the operation of the gift shop.

Section 6.19 Indoor Recreation (NEW SECTION)

Indoor recreation facilities, such as, but not limited to, bowling establishments, billiard halls, indoor archery ranges, indoor tennis courts, indoor skating rinks, arcades, and similar indoor recreation uses shall comply with the following regulations:

(A) Setbacks. Indoor recreation uses shall be set back a minimum of 200 feet from any property line which abuts a residential district.

(B) Adverse Impacts. The location, design, and operation of an indoor recreation use shall not adversely affect the continued use, enjoyment, and development of adjacent properties. In considering this requirement, particular attention shall be focused on the adverse impact resulting from loitering on the premises.

(C) Access. Indoor recreation uses shall have direct access onto a major thoroughfare.

Section 6.20 Junk Yard (NEW SECTION)

Junk yards are subject to compliance with Ordinance No. 41, Peninsula Township Junk Ordinance, the provisions of all Township codes and Ordinances and safety standards of the State and County, and the following requirements which are intended to protect the environment, ensure pure air and clean

Deleted: one (

Deleted:)

Commented [PS39]: Special Land Use permits run with the property, so they cannot be issued on an annual basis.

Deleted: ¶
<#>A special use permit for this purpose shall be good for the period of one (1) year. The Zoning Administrator may renew the permit annually unless in receipt of written complaints regarding the land use, in which event the applicant must repeat the original procedure for approval.¶

Deleted: Personal

Deleted: (REVISED BY AMENDMENT 118C)

Deleted: (ADDED BY AMENDMENT 180)

Commented [PS40]: Having examples of permitted items could be considered exclusive and difficult for the Township to administer. Because these regulations apply to only 1 site, its effect is very limited.

Deleted: Examples include items such as light house replicas, hats, t-shirts or sweatshirts, coffee mugs, pencils, pins, pens, prints, books, calendars, lapel pin, magnets, puzzles, patches, ornaments and bookmarks with lighthouse logos.

groundwater and otherwise protect nearby residential, business, office, industrial and institutional uses form hazards and from noise, dust or other radiated disturbances:

(A) All junk yards shall have solid masonry obscuring wall of at least 8 feet in height, of 1 uniform color and meeting the Building Code standards, constructed at least 50 feet from the side and rear lot line. A greenbelt shall also be planted and maintained outside of said wall pursuant to *Section 10.03*.

(B) Where a junk yard has frontage on a road or highway, a solid masonry obscuring wall of at least 8 feet, or 1 uniform color and meeting the Building Code standards, shall be setback not less than 150 feet from said road or highway right-of-way or easement line. A greenbelt shall also be planted and maintained outside of said wall pursuant to *Section 10.03*, except where entrance and exit driveways are located, in order to screen the junk yard activities from the road or highway. A sales and or office building for keeping business records of the junk yard operation is permitted in the setback area noted above provided that front and side setback requirements of the district are met.

(C) Junk material shall be stored a minimum distance of 20 feet from any industrial or airport zoned property line. Storage of such materials on any site shall not be piled higher than the height of the 8-foot masonry wall or fence feet. A roadway shall be provided, paved, graded and maintained from the street to the rear of the property to permit free access of fire trucks at any time.

(D) There shall be no burning of tires, vehicle bodies, wiring, oil or waste products on the site, and all industrial processes, including the use of equipment for cutting, compressing or packaging shall be conducted within a completely enclosed building.

(E) All trucks and other vehicles shall be stored or parked within the required walled or fenced enclosure.

(F) All truck loading and unloading shall be performed within the required walled or fenced enclosure.

(G) The operator of the junk yard shall be responsible to clean up all debris and junk accidentally deposited on any public right-of-way within 1 mile of the junk yard site.

(H) There shall be compliance with all site plan review requirements under *Section 14.02*.

Section 6.21 Keeping of Domestic Pets (currently Section 6.2.2(5))

The keeping of domestic pets is permitted in all agricultural and residential districts, provided that all pets are so maintained as to not constitute a public nuisance and provided further that in the event the same are horses or livestock, then the sheltering structure shall be at least 200 feet from any lot line and the pasturing area shall be at least 100 feet from any lot line; and both the pasturing area and the sheltering structure shall be at least 200 feet from any well or residence.

Deleted: Provided

Deleted: two hundred (

Deleted:)

Deleted: one hundred (

Deleted:)

Deleted: two hundred (

Deleted:)

Section 6.22 Kennels (NEW SECTION)

The following regulations shall apply to Kennels:

(A) Lot Size. The lot on which any such kennel is located shall be a minimum of 5 acres in size.

(B) Breeding. Breeding of animals shall be restricted to no more than 2 litters per year.

(C) Setbacks. Buildings in which animals are kept, animal runs, and exercise areas shall not be located in any required front, side, or rear yard setback area, and shall be located at least 100 feet from any dwellings or buildings used by the public on adjacent property.

(D) Kennels Prohibited in Subdivisions and Site Condominiums. Regardless of lot size, private kennels shall not be permitted in platted subdivisions and site condominiums.

(E) Operation. Any such kennel shall be subject to all permit and operational requirements established by County and State regulatory agencies.

(F) Sound Control. All animals shall be contained in a building which is fully soundproofed, using insulation, soundboards, and acoustic tile.

(G) Odor Control. Non-absorbent surfaces (such as sealed concrete or ceramic tile) shall be used throughout the kennel. Dog waste shall be power flushed or otherwise removed on a regular schedule, but no less than 4 times daily.

Section 6.23 Local Food Production Facility (NEW USE)

(A) Statement of Intent. The intent of this section is to provide agricultural land owners the ability to create and/or expand an agricultural related business for the production, processing and sales of farm products grown by local farmers. It is intended to have economic practices consistent with the Township's rural character while protecting the general public's health, safety, and welfare.

Deleted: It is the intent of this subsection to promote a thriving local agricultural production industry and preservation of rural character by allowing construction and use of a Farm Processing Facility. The Farm Processing Facility use includes retail and wholesale sales of fresh and processed agricultural produce but is not intended to allow a bar or restaurant on agricultural properties and the Township shall not approve such a license. The majority of the produce sold fresh or processed has to be grown on the specific farm operation (land owned or leased for the specific farm operation) of the party owning and operating the Specific Farm Processing Facility. Eighty-five (85) percent of the produce sold fresh or processed has to be grown on Old Mission Peninsula. Activities such as weddings, receptions and other social functions for hire are not allowed, however, participation in approved township wide events is allowed. It is not the intent to grant any vested interest in non-agricultural uses of any structure built for a Farm Processing Facility. This amendment is not intended to supersede any Conservation Easement. (REVISED BY AMENDMENT 181)

(B) Development and Use Standards. To preserve the health, safety, and welfare of the community, the following regulations shall limit the physical location and design characteristics of a Local Food Production Facility:

(1) Building Size Limit. The footprint of the Local Food Production Facility structure shall be limited to 6,000 square feet. Pre-existing structures may be utilized for a Local Food Production Facility if the structure's location is in compliance with the requirements of *Section 6.23(B)(6)* and the applicant can demonstrate that the proposed structure is in compliance with the standards of the Grand Traverse Construction Code Office.

(2) Impervious Surface Coverage Limit. The maximum surface area of the Local Food Production Facility's impervious surface coverage shall not exceed 5 percent of the subject parcel.

(3) Retail Area Limits. The retail space of the Local Food Production Facility shall not exceed 1,500 square feet and shall include the following restrictions:

(a) No less than 50 percent of the overall retail space shall be used to display products produced on and by the on-site Local Food Production Facility.

(b) No less than 85 percent of the overall retail space shall be used to display products produced within and by an Old Mission Peninsula farm operation.

(c) The sale of non-agricultural items and products which require a permit from the Michigan Liquor Control Commission are prohibited.

(4) **Limitations on Sources of Produce.** A majority of the produce processed and sold shall be grown on the land owned or leased for the specific farm operation by the same party owning and operating the specific Local Food Production Facility. The sale of non-agricultural items and products which require a permit from the Michigan Liquor Control Commission are prohibited.

(5) **Parcel Requirements.** The host parcel must meet the minimum lot area requirements for an agricultural zoned parcel unless said parcel is recognized as a legal nonconforming parcel of record.

(6) **Setbacks.** Structures utilized for any part of the production or retail portion of the facility shall maintain the following minimum setbacks:

(a) Front Yard Setback. 100 feet.
(b) Side and Rear Yard Setback: 50 feet.
(c) Minimum of 200 feet from any pre-existing residential structure on an adjoining property.

(7) **Parking.** Parking shall comply with *Article 9* of the Zoning Ordinance.

(8) **Lighting.** All lighting shall conform to the requirements of *Section 8.07*.

(9) **Signs.** All signage shall meet the standards of *Article 11*.

(10) **Access.** Access to the site shall be directly from a public road. A driveway permit from the County Road Commission or MDOT shall be required before a land use permit can be issued.

(11) **Data and Records.** The owner of the specific Local Food Production Facility shall annually provide data and records to the Planning & Zoning Department showing compliance with the requirements of this section related to the source of produce. This documentation shall be supplied to the Township on a form provided by the Planning & Zoning Department.

(12) **Residence within a Local Food Production Facility.** One single-family dwelling may be allowed on the parcel utilized for the Local Food Production Facility. The single-family dwelling may be allowed as part of the Production Facility provided no other dwelling units exist upon the subject property.

Deleted: <#>Farm Processing Facility is permitted in the Agricultural A-1 Zone subject to the following: (REVISED BY AMENDMENT 181)¶
<#>¶
<#>**Retail and Wholesale Sales.** Retail and Wholesale Sales (including tasting) of fresh or processed agricultural produce is allowed subject to the requirements of subsection (b) 2 and further provided:¶
<#>¶
<#>The Liquor Control Commission and the Michigan Department of Agriculture shall control licenses and compliance;¶
<#>¶
<#>Grape wine that is processed, tasted and sold in a Farm Processing Facility under this section is limited to "Old Mission Peninsula" appellation wine meaning 85% of the juice will be from fruit grown on Old Mission Peninsula;¶
<#>¶
<#>Fruit wine, other than grape wine, that is processed, tasted and sold in a Farm Processing Facility under this section is limited to wine bearing a label identifying that 85% of the juice is from fruit grown on Old Mission Peninsula;¶
<#>¶
<#>Sales of wine by the glass in a tasting room is allowed pursuant to the minimum requirements of the Michigan Liq ...

Deleted: ¶ ...

Deleted: requirements

Deleted: ¶ ...

Deleted: The minimum setbacks for the Farm Processing Facility including retail areas and customer parking shall be

Deleted: residence

Deleted: <#>**Farm Processing Facility Size.** The total floor area above finished grade (one or two stories) of the Farm ...

Deleted: A minimum of one parking space for each 150 square feet of floor area in the retail/tasting area.

Deleted: (REVISED BY AMENDMENT 175B)

Deleted: A Farm Processing Facility sign meeting

Deleted: is allowed with a Food Processing Facility

Deleted: (REVISED BY AMENDMENT 174)

Deleted: Farm Processing

Deleted: Zoning Administrator

Deleted: that a majority of the products processed are grown on the land owned or leased for the specific farm ...

Deleted: ¶
<#>**Approval Process.**¶ ...

Deleted: Farm Processing Facility

Deleted: (ADDED BY AMENDMENT NO 146)¶
<#>¶ ...

Deleted:

Deleted: single

Deleted: a structure containing a Farm Processing

Deleted: the following requirements are met:¶
¶ ...

(13) Federal, State, and Local Compliance. Property owners shall demonstrate compliance with all applicable standards of the Grand Traverse County Construction Code Department, Health Department, Road Commission, Soil Erosion Office, and any other applicable Local, State, or Federal agency requirements.

(14) Retail Hours of Operation. Hours of operation of the retail area shall be no later than 9:30 p.m.

Section 6.24 Marinas (currently Section 8.7.3(5))

(A) Marinas in C-1 District.

(1) All sites shall be located on a major thoroughfare, as defined herein or classified on the Master Plan of Peninsula Township, and all ingress and egress to the site shall be from said thoroughfare.

(2) All points of entrance or exit for motor vehicles shall be located no closer than 200 feet from the intersection of any 2 streets or highways.

(3) Whenever any use permitted herein abuts property within any Residential District, a transition strip at least 200 feet in width shall be provided between all operations and structures, including fences, and the residential property. Plant materials, grass, and structural screens or fences of a type approved by the Township Board shall be placed within said transition strip.

(4) A minimum yard of 100 feet shall separate all uses and operations permitted herein, including fences, from any public street or highway used for access or exit purposes. This yard shall be landscaped in accordance with plans approved by the Township Board.

Section 6.25 Mobile Homes (On Individual Lots: currently Section 6.7.2(3); In Residential Districts; currently 8.9)

(A) Provided the mobile home shall meet the requirements of the Nation Manufactured Housing Construction and Safety Standards Act (24 CFR part 3280) and bear a HUD label so indicating.

(B) Statement of Intent. It is the purpose of this section to establish reasonable requirements for mobile homes located outside of licensed mobile home parks and the A-1 District to assure that the mobile home, when located upon the particular site, would compare favorably to other housing in such things as aesthetics, insulation, adequacy of plumbing, size of living space, protection from wind storm damage, quality of manufacture, a solid foundation under the same, obscurity of the wheels and chassis and a community standard size lot.

(C) Zones in Which Mobile Homes are permitted. Mobile homes as defined in *Article 2* shall be permitted subject to the provisions and requirements hereafter set forth in the following zones, viz: R-1A; R-1A, PUD; R-1B; R-1B, PUD; R-1C, PUD; R-1D, PUD.

(D) Qualifying Conditions.

Deleted: Comprehensive Development

Deleted: two hundred (

Deleted:)

Deleted: two (

Deleted:)

Deleted: two hundred (

Deleted:)

Deleted: one hundred (

Deleted:)

Deleted: Mobile

Deleted: Home

(1) Each mobile home shall bear a label required by Section 3282.362(c) (2) of the Federal Manufactured Home Procedural and Enforcement Regulation. Mobile homes shall meet the requirements of the National Manufactured Housing Construction and Safety Standards Act (24 CFR part 3280) and bear a HUD label so indicating.

Deleted: Mobile

Deleted: Mobile Home

(2) Each mobile home shall be installed pursuant to the manufacturer's setup instruction and shall be secured to the premises by an anchoring system or device complying with the rules and regulations of the Michigan Mobile Home Commission.

(3) Within 10 days following installation, all towing mechanism shall be removed from each mobile home. No mobile home shall have any exposed undercarriage or chassis.

Deleted: ten (

Deleted:)

(4) Each mobile home shall have a permanent perimeter wall of conventional building materials which shall prevent the entrance of rodents, control heat loss and contribute to aesthetic compatibility with surrounding structures.

(5) Each mobile home shall have within the perimeter wall a full or partial basement; any space not occupied by a basement shall have a full concrete slab which may be used as a crawl space for storage purposes.

(6) All construction and all plumbing, electrical apparatus and insulation within and connected to each mobile home shall be of a type and quality conforming to the "Manufactured Home Construction and Safety Standards" as promulgated by the United States Department of Housing and Urban Development, being 24 CFR 3280, as from time to time amended. Additionally, all dwellings shall meet or exceed all applicable roof snow load and strength requirements.

Deleted: Mobile

(7) **Exterior Finish, Light Reflection.** Any materials that are generally acceptable for housing built on the site may be used for exterior finish if applied in such a manner as to be similar in appearance; provided, however, that reflection from such exterior shall not be greater than from siding coated with clean, white, gloss, exterior enamel.

(8) **Minimum Width.** The minimum elevational width shall be 24 feet.

(9) Each mobile dwelling shall be aesthetically compatible in design and appearance with other residences in the adjacent area as defined in *Article 2*, particularly with regard to foundation treatment, siding and roofing materials and perimeter walls. Compatible materials such as siding, screen walls, etc. may be added to assure aesthetic compatibility with other structures.

(10) The compatibility of design and appearance shall be determined by the Peninsula Township Planning Commission and Township Board. The Planning Commission and Township Board shall base their decision on the character, design and appearance of residential dwellings in adjacent areas of the Township.

(11) **Aesthetic Compatibility Checklist.** The Peninsula Township Planning Commission and Township Board shall use a checklist to determine the compatibility of a proposed mobile

home with conventional structures in coterminous areas. The township Clerk shall furnish copy of the blank form of checklist without charge upon request.

Section 6.26 Mobile Home Parks (currently Section 8.2 and Section 7.2.6)

(A) Statement of Intent. Mobile home park developments have special characteristics which require full consideration of their locational needs, their site layout and design, their demand upon community services, and their relationship to and effect upon surrounding uses of land. Compliance shall be had with all of the procedures and applicable requirements stated in *Section 14.03* and the additional requirements of this Section.

(B) Uses That May Be Permitted. Any mobile home development may include any or all of the following uses, PROVIDED that a plan of the proposed development is approved by the State of Michigan in accordance with Act No. 96, Public Acts of 1987, as amended, and PROVIDED FURTHER that said development plan can meet the standards of this Section.

Deleted: 419

Deleted: 1976

(1) Mobile Homes. "Mobile Homes" means a structure, transportable in one or more sections, which is built on a chassis and designed to be used as a dwelling with or without permanent foundation, when connected to the required utilities, and includes the plumbing, heating, air-conditioning, and electrical systems contained in the structure. "Mobile home" does not include a pick-up camper, travel trailer, motor home, modular homes, recreational vehicle, converted bus, tent trailer, or other transportable structure designed for temporary use.

(2) One permanent building for conducting the operation and maintenance of the mobile home park development and such other accessory buildings including a caretaker's residence as may be necessary for the normal operation of the mobile home development.

(3) Parking requirements.

(a) Parking shall be prohibited on any street or access lane.

(b) No visitor vehicles shall be parked or stored within any required open space between mobile homes or any drive or street within the mobile home park.

(c) Space between mobile home units may be used for parking of motor vehicles provided that such space is paved and meets the requirements of *Article 9* of this Ordinance.

(d) Off-street group parking facilities shall be within 300 feet of all mobile home lots intended to be served.

Deleted: three hundred (

Deleted:)

(C) Site Development Requirements: All mobile home park developments shall comply with the following site development and maintenance requirements, viz:

(1) State Law. The development shall comply with all requirements of Act 96, Public Acts of 1987, as amended. In cases where higher standards have been adopted by the Township and approved by the Mobile Home Commission, the higher standards shall prevail.

(2) Plans. A preliminary plan filed in conformance with the requirements of Section 11 of the "Mobile Home Commission Act" shall be filed with the Zoning Administrator at the time of the filing of application for a special use permit.

(3) License. Every mobile home park shall be licensed by the State of Michigan as required by Rule 802 of the General Rules of the Michigan Mobile Home Commission.

(4) Site Size. Any mobile home park development shall have a site of at least 15 acres.

(5) Site Location. Access to the mobile home park development site location shall be from a public thoroughfare only. Said Access shall be designed with a capacity to safely and effectively handle any increased traffic which may be generated by the mobile home park development.

(6) Park Yard Dimension. Mobile home developments shall also meet the zoning requirements of *Section 6.26* and *Section 7.09* of this Ordinance.

(7) Site Access.

(a) Each mobile home park development shall be provided with a paved entrance or exit drive off a public thoroughfare.

(b) Said entrance or exit drives shall be located no closer than 125 feet from the intersection of any 2 public thoroughfares.

(8) Space Requirements.

(a) The mobile home park shall be developed with sites having an average of 5,500 square feet per mobile home site being served.

(b) Said 5,500 square foot average may be reduced by 20 percent provided that the individual site shall be equal to at least 4,400 square feet.

(c) For each square foot of land gained through the reduction of the site below 5,500 square feet, at least an equal amount of land shall be dedicated as open space, but in no case shall the open space requirement be less than that required under R 125.1946, Rule 946, of the Michigan Administrative Code.

(9) Yard Requirements. No mobile home unit shall be located closer than 23 feet from any private street or roadway, 10 feet from a side site line, or 10 feet from a rear site line.

(10) Wood Burning Heating Systems. The installation of wood burning heating stoves or furnaces shall require a permit issued by the Grand Traverse County Construction Code Office.

Deleted: 419
Deleted: 1976
Deleted: Department of Commerce
Deleted: fifteen (
Deleted:)
Deleted: one hundred twenty-five (
Deleted:)
Deleted: two (
Deleted:)
Deleted: twenty (
Deleted:)
Deleted: twenty-three (
Deleted:)
Deleted: ten (
Deleted:)
Deleted: ten (
Deleted:)

(11) Park Roads.

(a) Each mobile home lot or premises shall have access to a park driveway, roadway or street which shall be paved to a minimum width of 24 feet; however, no parking shall be permitted on said roadway or street.

(b) If a one-way street pattern is proposed and adopted, then the street width may be paved to a minimum of 16 feet.

(12) Mobile Home Unit Lot Improvement. Each mobile home unit shall occupy at least a single lot size and shall comply with the following, viz:

(a) All parking areas within the mobile home park shall be clearly defined.
(b) Each mobile home unit shall have skirting or equal treatment which shall be fire resistant, vented, and have access panels.

(13) Building Height. No mobile home unit or other building or structure shall exceed 25 feet in height; excepting that, one permanent building in the mobile home park development used for conducting the business operation may contain 2 stories with a maximum height of 35 feet.

(14) Lighting. All lighting shall conform to the requirements of *Section 8.07*.

(15) Heating. All above-ground fuel tanks shall be suitably screened.

(16) Mobile Home Unit Sales.

(a) The business of selling new and/or used mobile homes as a commercial operation in connection with the operation of a mobile home development is prohibited.

(b) New or used mobile homes located on lots within the mobile home park may be sold by a licensed dealer and/or broker.

(c) This section shall not prohibit the sale of a new or used mobile home by a resident of the mobile home development provided the development permits the sale.

(17) Occupancy. No completed mobile home unit shall be occupied until a park license covering the occupied site has been issued by the State of Michigan.

(18) Periphery Setbacks (Section 7.2.6).

(a) Intent. It is the intent of this Ordinance that residential developments other than conventional subdivisions be designed, constructed, operated and maintained so as to be harmonious and appropriate in appearance with the existing or intended character of the general vicinity of the township in which they are located, and that such a use will not change the essential character of the area in which it is proposed. In as much as mobile home parks may involve higher densities of land use, abut

Deleted: twenty-four (
Deleted:)
Deleted: sixteen (
Deleted:)
Deleted: twenty-five (
Deleted:)
Deleted: two (
Deleted:)
Deleted: thirty-five (
Deleted:)
Deleted: (REVISED BY AMENDMENT 175B)
Deleted: , Department of Commerce
Deleted: planned unit developments,
Deleted: and other group housing developments

agricultural land, or have building types that distinctly differ from the single-family, conventionally-built dwellings which predominate the Township, periphery setbacks for such developments are established.

(b) General Setbacks. All buildings including mobile home park development shall be placed at least 50 feet from any public right-of-way line for existing roadways bordering a site, and at least 30 feet from any development boundary line which is not a public road right-of-way. Setback spaces shall be occupied by plant materials and appropriately landscaped.

(c) Setback from Agricultural Areas. Planned unit developments abutting agricultural areas shall meet the setback requirements of *Section 7.09.*

Section 6.27 Public and Private Conservation Areas (NEW SECTION)

Uses and structures are limited to the conservation of water, soils, open space, forest, and wildlife resources.

Section 6.28 Public Areas, Public Parks, and Public Recreation (currently Section 6.7.2(13))

Public areas, public parks, and public recreation areas shall include forest preserves, game refuges, and similar public uses of low-intensity character.

Section 6.29 Recreational Unit Parks and Campgrounds (currently Section 8.4)

(A) Intent and Purpose. To provide for the rental of spaces for Recreational Units in a Recreational Unit Park. Recreational Unit Parks are normally operated on a seasonal basis, however limited winter operations are also customary. The Recreational Unit Park shall be subject to the procedures and requirements in *Section 14.03*. This type of park is a "Destination Type" of park where lots can be rented for more than a few days and renters are there to enjoy the natural character of the Township. Buffers are required to protect permanent residents of the area from the nuisance aspects associated with the transient use of Recreational Unit Parks, such as increased traffic and noise. Recreational Unit Parks are for temporary use and are not intended for permanent occupancy.

(B) Site Development Requirements. Site developments shall comply with the provisions of Act 368 of the Public Acts of 1978, as amended (an Act to license and regulate campgrounds), and also with the following, viz:

(1) Frontage. A Recreational Unit Park shall have a minimum of 330 feet of frontage on a county road or state highway.

(2) Perimeter Setbacks and Buffering. The Recreational Unit Park shall provide a 200-foot setback from all property lines for structures and Recreational Unit sites. Not less than 2 staggered rows of evergreen trees planted not more than 15 feet apart shall be planted and maintained within 50 feet of the property lines, and such evergreen trees shall be at least 8 feet in height at the time of planting.

Deleted: may

Deleted: single-family dwellings and mobile homes within a planned unit development, a group housing development or a

Deleted: fifty (

Deleted:)

Deleted: thirty (

Deleted:)

Deleted: 171

Deleted: 1970

Deleted: three hundred thirty (

Deleted:)

Deleted: two hundred (

Deleted:)

Deleted: three

Deleted: fifty (

Deleted:)

Commented [PS41]: The requirement for a double row of 8-foot high evergreens planted 15 feet apart should be sufficient for screening.

Deleted: , in addition, within the two hundred (200) foot setback, a mixture of deciduous and evergreen trees shall be planted to block views of the development from adjacent properties and to reduce noise.

(3) **Entrance Road and Interior Roads.** The entrance road and interior roads shall meet either Peninsula Township Private Roads Standards or County Road standards, and shall meet the Commercial Driveway Entrance requirements of the County Road Commission or State Department of Transportation.

(4) **Entrance and Exit Through Subdivision or Condominium Prohibited.** Recreational Unit Park entrances and exits shall not be through a subdivision or condominium.

(5) **Entrance Requirements.** There shall be either:

(a) Two separate road entrances connecting a continuous interior road; or
(b) One entrance and a loop road beginning within 100 feet of the public road serving the park.

(6) **Minimum Lot Area.** The minimum parcel size for a Recreational Unit Park shall be 20 acres.

(7) **Maximum Number of Recreational Unit Sites.** The maximum number of sites shall be 200.

(8) **Time Limit on Rental of Unit Sites.** Spaces in a Recreational Unit Park shall be rented by the day or week only and no recreational unit or occupant of such space shall remain in the same park for a period of more than 30 days in a 6-month period.

(9) **Prohibited Rentals.** No motorized off-road vehicles (e.g., snowmobiles, 4-wheelers, etc.), water craft, or snowmobiles shall be rented or used on the property.

(10) **Winter Rentals.** Winter operations are permitted provided that all utilities, including central toilet and shower facilities, are provided during winter operations.

(11) **Flammable Liquid Sales Prohibited.** Sales of bottled gas and other flammable liquids are prohibited on the premises. However, the sale of firewood and charcoal is permitted.

(12) **Emergency and Fire Protection Plan Required.** A plan for emergencies and fire protection shall be submitted with the application. The emergency and fire protection plan shall be reviewed by the Township Fire Chief and the Chief's comments submitted during Township review. The plan shall include the following information, at a minimum:

(a) Fire/Emergency Equipment access to each recreational unit site.
(b) Emergency access to the Management facility.
(c) Water storage tank on site or alternate water source to supply water for firefighting.
(d) Fire rings provided on all recreational unit sites where campfires are to be allowed.
(e) Emergency telephone service is provided in a visible, convenient location.
(f) Fire extinguishers at the headquarters building and at each public station facility building.

Deleted: one hundred (
Deleted:)
Deleted: twenty (
Deleted:)
Deleted: two hundred (
Deleted:)
Deleted: thirty (
Deleted:)
Deleted: six
Deleted: No
Deleted: sales
Deleted: allowed
Deleted: '

(13) **Passive Outdoor Activities Only.** All outdoor activities shall be limited to passive uses such as hiking, cross-country skiing, volleyball, basketball, tennis, and horse shoes.

(14) **Shared Access.** If shared access is provided, each site having shared access privileges shall be considered as a separate family under the shared access provisions of this Ordinance.

(15) **Perimeter Fence Required.** The Recreational Unit Park shall be fenced with a minimum 6-foot high chain link fence, or as determined by the Township Board. The fence does not have to be on the perimeter of the Park, but does have to enclose areas that area used by sites or for recreational use, such as trails.

(16) **Underground Utilities Required.** All utilities shall be placed underground.

(17) **Sewage Dumping Station.** A sewage dumping station shall be provided and shall be subject to the review and approval of the Grand Traverse County Health Department, however it shall not be located closer than 50 feet from the management building.

(18) **Electricity and Drinking Water.** Electricity and drinking water shall be provided to each recreational unit site designed for a travel trailer, motor home, or similar recreational vehicle.

(19) **Minimum Recreational Unit Site Dimensions.** Each recreational unit site shall contain a minimum of 1,500 square feet, except that the minimum size for sites specifically designed for tents shall be 3,000 square feet. The minimum space dimensions per unit are:

(a) Width – 30 feet
(b) Depth – 60 feet
(c) These dimensions shall be increased as necessary to accommodate larger vehicles so that there is no less than 8 feet between a tent or recreational vehicle and the perimeter of the rental space. This 8-foot area (16 feet between recreational units) shall be planted with a row of shrubs and a minimum of 2 trees per recreational unit site line.

(20) **Parking Surface.** Parking spaces for recreational units other than tents shall either be paved or covered with a minimum of 4 inches of packed stone.

(21) **Parking Spaces.** Each site shall have a parking space for at least 1 vehicle other than the recreational unit.

(22) **Recreational Unit Site Identification.** Each recreational unit site shall be numbered, with numbers shown on the site so as to be readily available to emergency personnel.

(23) **Lighting.** All lighting shall conform to the requirements of *Section 8.07*.

(24) **Entrance Way Sign.** An sign located at the entrance is allowed and shall comply with *Article 11*.

Deleted: **Site Development Standards.** The Recreational Unit Park shall meet the following site design standards:¶
¶
Deleted: six (
Deleted:)
Deleted: (
Deleted:)
Deleted: thirty (
Deleted:)
Deleted: sixty (
Deleted:)
Deleted: eight
Deleted: trailer
Deleted: eight
Deleted: two
Deleted: lot
Deleted: ”
Deleted: one
Deleted: (REVISED BY AMENDMENT 175B)
Deleted: Entrance Way Sign

(25) **Headquarters Building Parking.** Parking for the headquarters building shall comply with *Article 9*.

(C) Support Uses.

(1) **Headquarters Building.** One headquarters building may be allowed on the premises, and may contain the following uses:

(a) Management headquarters, (including a Manager's Residence provided it meets the existing residential size requirements of the Zoning Ordinance).

(b) Laundry facilities.

(c) Vending machines are allowed, but not a Convenience store.

(d) Indoor recreation area.

(e) Swimming pool.

(2) **Public Station Facilities.** Public station facilities, housed in all-weather structures, shall be provided for the use of recreational unit park registered guests only and shall contain adequate water outlet, toilet, waste container, and shower facilities. Public station facilities shall be provided uniformly throughout the site at a ratio of not less than 1 such station for each 100 sites. A public station facility may be included in the headquarters building or in a separate structure(s).

Deleted: A central toilet/shower

Deleted: facility

Deleted: The

(3) Limitations on Support Uses and Support Use Buildings:

(a) Support use buildings and the parking area primarily related to their operations shall not occupy more than 0.1 percent of the area of the park.

Deleted: one-tenth of one (

Deleted:)

(b) Uses shall be restricted to occupants of the recreational unit sites.

(c) Support use buildings shall present no visible evidence of their commercial character which would attract customers other than occupants of the park.

(d) Support use buildings shall be screened from view of a public road or any adjacent residential district.

(D) Accessory Uses.

(1) Uses and structures customarily incidental to the operation of a Recreational Unit Park may be allowed at the discretion of the Township Board as accessory uses.

(2) An indoor or outdoor swimming pool may be allowed for registered guests of the Recreational Unit Park.

(E) Development and Site Plan Requirements. The site plan shall include the information required in *Section 14.02(B).*

(F) Phased Development. Where a Recreational Unit Park development is proposed for construction in a series of stages, a master plan for the development of the entire tract of land shall be submitted along with the detailed plans and specifications for the initial stage, as well as concepts for any subsequent stages.

Section 6.30 Remote Winery Tasting Rooms (currently Section 8.7.3(12))

(A) Statement of Intent. It is the intent of this subsection to allow wine tasting in a tasting room that is not on the same property as the winery with which is associated and to establish reasonable standards for the use.

(B) Minimum Lot Size. There shall be a minimum parcel size of 5 acres for a Remote Winery Tasting Room.

(C) Residential and Other Uses Prohibited. The 5 acre parcel shall not have another use such as housing, but may have grapes or other farm crops.

(D) Building Compatibility with Surrounding Area. The building used for the wine tasting, shall be in keeping with the neighborhood character. Preliminary building elevations shall be submitted to the Planning Commission. The Planning Commission shall base its decision on structures within one-half mile of the proposed structure and shall consider roof type, pitch, color, and also siding type and color.

(E) Minimum Associated Land and Agricultural Area. The tasting room and the parcel shall be under the same single ownership, and in addition, there shall also be a minimum of 150 acres in Peninsula Township under that ownership and a minimum of 50 percent of the 150 acres shall be in active agricultural use.

(F) Township Winery Management Required. The Wine Tasting Room must be managed by a Peninsula Township Winery.

(G) Tasting Location. Tasting of wine produced at the winery shall be the only wine tasted in the Tasting Room.

(H) Wine Sales. Sales of wine by the bottle produced at the winery are allowed for off-premises consumption. Sales of wine by the glass is allowed pursuant to the minimum requirements of the Michigan Liquor Control Commission rules and related Michigan Department of Agriculture and Rural Development permits regarding the sales of limited food items for on-premises consumption. The Liquor Control Commission and the Michigan Department of Agriculture and Rural Development shall control licenses and compliance.

(I) Non-Food Sales. Retail sale of non-food items which promote the winery or Peninsula agriculture is permitted, provided each item has the logo of the winery permanently affixed to

Commented [PS42]: All site plan information requirements for all uses will be in Article 14.

Deleted: ¶
<#>Name, address and telephone number of applicant.¶
¶
<#>Interest of the applicant in the proposed Recreational Unit Park.¶
¶
<#>Location, address and legal description of the entire proposed Recreational Unit Park.¶
¶
<#>Existing zoning of subject property and all adjacent properties.¶
¶
<#>Complete engineering plans and specifications of the proposed Recreational Unit Park showing:¶
¶
<#>The area and dimensions of the entire tract of land;¶
¶
<#>The land uses occupying the adjacent properties;¶
¶
<#>The number, size and location of the proposed vehicle sites and other parking areas;¶
¶
<#>The location, right-of-way, surfaced roadway width, and the surfacing material of roadways and walkways;¶
¶
<#>The proposed interior vehicular and pedestrian circulation patterns;¶
¶
<#>The location of buildings, sanitary stations, and any other existing or proposed structures;¶
¶
<#>The location of water and sewer lines and riser pipes;¶
¶
<#>Plans and specifications of the water supply, sewage disposal and refuse facilities;¶
¶
<#>Plans and specifications of all buildings constructed or to be constructed within the Recreational Unit Park;¶
¶
<#>The locations and details of lighting, electric, and gas systems;¶
¶
<#>The location of all drainage easements to comply with County Drain Commission requirements; and¶
¶
<#>Solid waste disposal plan.¶

Deleted: five (

Deleted:)

Deleted: five

Deleted: /

Deleted: %

Deleted: (REVISED BY AMENDMENT 121)

Deleted: (REVISED BY AMENDMENT 181)

Deleted: (REVISED BY AMENDMENT 181)

Deleted: and

the item by silk screening, embroidery, monogramming, decals, or other means of permanence. Such logo shall be as large as any other advertising on the item. No generic or non-logo items may be sold. Promotional items allowed may include corkscrews, wine glasses, gift boxes, t-shirts, bumper stickers, etc.

(J) **Food Sales.** Retail sale of packaged food items allowed in addition to bottled wine are those which contain wine or fruit produced in Peninsula Township. Such food items shall be produced in a licensed food establishment and properly labeled including the winery logo as the dominant logo. Such food items shall be intended for off premise consumption. Such allowed packaged food items may include mustard, vinegar, non-carbonated beverages, etc.

(K) **Signs.** Signs and other advertising shall comply with *Article 11*.

Section 6.31 Rental of Non-Owner Occupied Dwellings (currently Section 6.2.2(2) (e))

(A) **Intent.** This is a clarifying provision that confirms the determination by the Zoning Board of Appeals on September 9, 1999, that the minimum length of time that a dwelling may be rented and be in conformance with the intent of the ordinance is 1 month and reaffirmed by the Zoning Board of Appeals on September 11, 2008 as 30 days. This is also to distinguish between rental of a "non-owner occupied dwelling" and "Bed and Breakfast" which is rental of an owner occupied dwelling.

(B) A property owner may rent a non-owner occupied dwelling, provided that the minimum length of time that the dwelling may be rented is 30 consecutive days.

Section 6.32 Roadside Stands (currently Section 6.7.2(8))

(A) Roadside stands selling regionally grown fresh and/or processed farm produce, raw forest products, cut flowers, potted plants, agricultural and forest products, but excluding items of a kind that are not grown regionally, and also excluding non-agricultural items and products the sale of which requires a permit from the Michigan Liquor Control Commission. Roadside stands are subject to the following terms and conditions:

(1) The stand is not over 150 square feet in area. The 150 square foot area may be within a larger existing structure, so long as the larger structure meets all the setback requirements of the Agricultural District.

(2) Awnings up to 4 feet projection from the stand structure may be used on 3 sides of the structure. In the event that the 150 square feet is part of a larger structure the awning is allowed only on the portion making up the 150 square feet.

(3) There shall be a ratio of 1 parking space per 25 square feet of structure to the maximum 150 square feet. There shall be a minimum of 5 parking spaces available and clearly marked with adequate turn around, so that all vehicles are furnished parking off the public right-of-way.

Deleted: a least twice

Deleted: may not promote, list or in any way identify any of the food or non-food items allowed for sale in the tasting room

Deleted: (REVISED BY AMENDMENT 120B) (REVISED BY AMENDMENT 121)

Deleted: amendment

Deleted: one

Deleted: (REVISED BY AMENDMENT 95)

Deleted: three

Deleted: five (

Deleted:)

(4) No land use permit is required for a roadside stand if the structure is less than 25 square feet in area.

(5) If the roadside stand is less than 25 square feet in area or is larger than 25 square feet but is only left in place seasonally, the roadside stand may be located adjacent to the front lot line rather than meeting the front setback required by *Article 4*.

(6) It is the intent of this section to provide only for the limited seasonal sale of agricultural and related products, but not to encourage the size of investment in equipment that would require a commercial zone.

Deleted: twenty five (

Deleted:)

Deleted: twenty five (

Deleted:)

Deleted: (REVISED BY AMENDMENT 86)

Section 6.33 Self Service Storage Facility (currently Section 6.6.5)

(A) Intent. The Self-Service Storage Facility provides space for the dead storage of personal goods left for a period of time. A number of people desire storage in addition to that normally provided with their residence such as: Excess furniture after moving from a larger to a smaller dwelling; Storage of automobiles, boats, recreational vehicles, and all kinds of miscellaneous bulky possessions. There are commercial businesses that need places to store old records and files. A Self-Service Storage Facility is to be located in one of the existing commercial areas in Bowers Harbor, Mapleton, and Old Mission, or in an area adjacent to these areas that is rezoned for commercial expansion. This is consistent with the Township Master Plan Commercial Policies.

Deleted: Comprehensive

(B) Uses. Rental Space for dead storage of personal property only and no business activity other than rental of storage units shall be conducted on site.

(C) Standards.

(1) **Prohibited Uses.** Rental storage units shall not be used for the servicing or repair of motor vehicles, boats, trailers, lawn mowers and other similar equipment; or for office, retail, manufacturing or other similar uses.

(2) **Prohibited Activities.** No activities such as miscellaneous or garage sales shall be conducted on the premises.

(3) **Indoor Storage Required.** All storage uses shall be inside an enclosed building.

(4) **On-Site Residence for Resident Manager.** An on-site residence for a resident manager may be approved by the Township Board as part of the business.

(5) **Required Lease Provisions.** The lease shall include a statement of allowed uses and uses that are not allowed by this Section.

(6) **Manager Required.** There shall be a designated manager to provide a security function; to insure that the conditions of the lease are met, and that the Self-Service Storage Facility is used for its designated purpose.

Deleted: ;

(7) **Resident Manager Required.** For Self-Service Storage Facilities with storage area of 20,000 square feet or more, a residence for a resident manager shall be required on the site as shown on an approved site plan.

(8) **Minimum Lot Size.** Minimum Lot Size shall be 45,000 square feet with a minimum width of 150 feet. (e.g., 80 10-foot by 20-foot units = 16,000 square feet, with a 35 percent lot coverage by structures requires a minimum lot area of 45,715 square feet.)

(9) **Setbacks.** Existing C-1 Zone Setbacks Front – 35 feet; Side 10 feet; Rear 30 feet. 35 percent lot coverage by structures.

(10) **Fencing.** Security fencing shall not include electrically charged, barbed wire or razor wire and shall not be placed in a required front yard setback area.

(11) **Separation Distance.** Spacing between structures shall be a minimum of 20 feet and emergency access shall be provided to at least 3 sides of all structures.

(12) **Lighting.** All lighting shall conform to the requirements of *Section 8.07*.

(13) **Signs.** Signs shall comply with *Article 11*.

(14) **Vehicle Access.** Access drives shall be designed to handle automobiles, vans, light trucks, and other two-axle vehicles. Access to all structures shall be as determined by the Township Board in consultation with the Peninsula Township Fire Chief.

(15) **Water and Sewer/Septic Prohibited for Storage Units.** Self Service Storage Facility shall not have water or sewer/septic facilities connected to any of the storage units.

Section 6.34 Sewage Treatment and Disposal Installations (currently Section 8.7.3(2))

(A) All uses shall be established and maintained in accordance with all applicable State of Michigan statutes.

(B) All operations shall be completely enclosed by a chain link fence not less than 6 feet high, with a staggered double row of 8-foot high evergreens spaced not more than 15 feet apart and planted on the outside of the fence.

(C) All operations and structures shall be surrounded on all sides by a transition strip at least 200 feet in width within which grass, plant materials and structural screens shall be placed on to minimize the appearance and odors of the installation. The Township Board shall approve all treatment of transition strips.

Section 6.35 Special Open Space Uses (currently Section 8.7.3(3))

(A) The proposed site shall be at least 2 acres in area.

Deleted: Parcel
Deleted: 10'
Deleted: 20'
Deleted: 22
Deleted: %
Deleted: equals 44,000
Deleted: -
Deleted: 35'
Deleted: 10'
Deleted: 30'
Deleted: %
Deleted: three
Deleted: (REVISED BY AMENDMENT 175B)
Deleted: wire
Deleted: six (
Deleted:)
Deleted: two hundred (
Deleted:)
Deleted: township
Deleted: two (
Deleted:)

(B) The proposed site shall have at least 1 property line abutting a major or secondary thoroughfare. All ingress and egress to the site shall be directly from said thoroughfares.

(C) All buildings and structures shall be set back at least 200 feet from any property or street line. Whenever the installation abuts upon property within a residential district, this 200-foot setback shall be landscaped with trees, grass, and structural screens of a type approved by the Township Board to effectively screen the installation from surrounding residential properties.

(D) No more than 25 percent of the gross site shall be covered by buildings.

Section 6.36 Tenant Houses (currently Section 6.7.2(12))

Tenant house shall be part of farm property for full-time farm employees associated with principal use and subject to the same height and setback requirements as the principal dwelling.

Section 6.37 Warehousing and Light Industrial (currently Section 8.7.3(7))

(A) Uses allowed.

(1) Printing and publishing establishments.

(2) Small contractors' establishment having no outdoor storage of materials or equipment.

(3) Wholesale and limited retail activities related to on-site warehousing. High volume retail sales normally accommodated in the other retail districts would not be allowed.

(4) Research facilities, provided there is no use of radioactive, toxic, or explosive materials.

(5) Computer operations.

(6) Small warehousing structures such as controlled atmosphere apple storage or storage for food products processed in a food processing plant located on the farm, provided that the storage structures shall only be used for agricultural products grown on Old Mission Peninsula.

(7) Light manufacturing operations employing 25 or less.

(B) Enclosed Buildings. Activities in this District shall be carried on in completely enclosed buildings.

(C) Noise emanating from a use in this District shall not exceed 60 decibels at any property line.

(D) Uses in this District shall conform to the following standards:

(1) Emit no obnoxious, toxic, or corrosive fumes or gases which are deleterious to the public health, safety or general welfare; except for those produced by internal combustion engines under designed operating conditions.

Deleted: one (
Deleted:)
Deleted: two hundred (
Deleted:)
Deleted: two hundred (
Deleted:)
Deleted: twenty-five (
Deleted: %)
Deleted: as a
Deleted: (REVISED BY AMD 131)
Deleted: (REVISED BY AMENDMENT 131)
Deleted: twenty-five (
Deleted:)
Deleted: sixty (
Deleted:)

(2) Emit no smoke, odorous gases or other odorous matter in such quantities as to be offensive at or beyond any boundary of the use of the parcel.

(3) Produce no heat or glare humanly perceptible at or beyond the lot boundaries.

(4) Produce no physical vibrations humanly perceptible beyond the lot boundaries.

(5) Shall be compatible with and in the best interest of farming uses either in general or on specific contiguous lands.

(E) **Supporting Evidence Required.** In all instances in which the Planning Commission or the Township Board considers the ability of a proposed use to meet all the requirements of this Section to be reasonably doubtful, it will be incumbent upon the proponent to furnish adequate evidence in support of his application. If such evidence is not presented, the land use permit shall not be issued.

Section 6.38 Winery, Use by Right (currently Section 8.7.3(10) and Section 6.7.2(19) – currently a "Farm Processing Facility")

Commented [PS43]: This language was originally proposed in 2011 and appears to be a substitute for the current "Farm Processing Facility" language.

(A) **Statement of Intent:** The purpose of this section is to provide agricultural land owners within the Township an opportunity to produce, market, wholesale and retail their alcohol related value-added products upon new or existing farm operations. The intent of this section is to increase the usage of agricultural lands within Peninsula Township for the creation of farm products and the promotion of the Township's agricultural economy by requiring that the majority of the produce sold fresh or processed has to be grown on the specific farm operation (land owned or leased for the specific farm operation) of the party owning and operating the Use by Right Winery. This section also intends to afford a Use by Right Winery accessory land uses. This section is not intended to supersede any Conservation Easement.

(B) **Site Development Standards:** In order to establish a Use by Right Winery and preserve the health, safety, and welfare of the community, the following regulations and development standards must be met:

(1) **Owner-Operated.** A Use by Right Winery shall be owner-operated.

(2) **Minimum Lot Area.** A total of 40 acres of agriculturally-zoned land (which may include the public road rights-of-way) in Peninsula Township are required to be devoted to the operation of a Use by Right Winery. The required 40 acres shall be owned or leased by the same party owning the associated Use by Right Winery and may consist of 1 or 2 parcels. The Use by Right Winery host parcel must be at least 20 acres. If there are 2 parcels supporting the Use by Right Winery, the non-host parcel need not be contiguous to the host parcel, but shall be agriculturally-zoned and located in Peninsula Township. None of the minimum 40 acres shall be used to satisfy acreage density or open space requirement of any other use in the Township while the Use by Right Winery use is in effect.

(3) Lot Width. The host parcel containing a Use by Right Winery shall have a minimum lot width of 330 feet of frontage on a public road.

(4) Minimum Arable Land. Not less than 75 percent of the Use by Right Winery site shall be arable land, and not less than 65 percent of the arable land of the site shall be used for the active production of perennial crops that can be used for wine production.

(5) Dwelling Permitted. There shall be not more than 1 house on the host parcel containing the Use by Right Winery and no more than 1 house on a non-host parcel associated with the Use by Right Winery.

(6) Lease Requirements. If any land dedicated to the Use by Right Winery is leased, the lease shall grant exclusive control and use to the operator of the Use by Right Winery. The lease shall be for a minimum of 1 year. The lease shall be recorded with the Grand Traverse County Register of Deeds and a copy submitted to the Planning & Zoning Department.

(7) Setbacks. Structures and parking areas supporting the Use by Right Winery shall maintain the following minimum setbacks:

(a) Front Yard Setback: 50 feet.

(b) Side and Rear Yard Setback: 100 feet.

(c) Minimum of 200 feet from a preexisting residential structure on neighboring property.

(8) Building Areas. The total floor area above finished grade (including all stories) of the Use by Right Winery shall be limited to a maximum of 12,000 square feet, which may be comprised of a single building or multiple buildings. Underground buildings are not limited to, and may be in addition to, the total square footage limitations of the Use by Right Winery provided that said buildings are below pre-existing ground level and has no more than 1 loading dock exposed. If the Use by Right Winery is established within a preexisting structure that is greater than the 12,000 square feet, then the operation may utilize up to 12,000 square feet of said structure for the Use by Right Winery if the following regulations can be met:

(a) The applicant can demonstrate that the proposed structure is in compliance with the standards of the Grand Traverse Construction Code Office, Health Department, Road Commission and any other applicable permitting agencies; and

(b) The structure's location is in compliance with the underlying district's zoning setbacks.

(9) Parking and Access. Parking and access drives shall be a paved and striped with the appropriate size and bulk requirements of *Article 9*.

(10) Lighting. Onsite lighting shall be in compliance with *Section 8.07* of this Ordinance.

(11) Signs. Signage shall be in compliance with *Article 11*.

(12) Source of Produce:

(a) Not less than 85 percent of the grapes utilized to make the wine produced, tasted, and sold at a Use by Right Winery shall have originated from Peninsula Township. A majority of the produce processed and sold shall be grown on the land owned or leased for the associated farm operation by the same party owning and operating the specific Use by Right Winery.

(b) Any fruit beverage shall meet the same source requirements as grape wine included in this section.

(c) Alcoholic beverages shall be produced and bottled at the Use by Right Winery and in compliance with all applicable Federal and State laws.

(d) Sparkling wine or sparkling juices may be "finished" and bottled off site.

(e) Dried fruit, a minimum of 85 percent by weight which is grown on Old Mission Peninsula and a minimum of 50 percent by weight which is grown on the associated farm, may be dried off premises and sold in the Use by Right Winery retail room, provided no more than the amount of fruit sent out for this processing is returned for retail sale.

(13) Data & Records. The owner of the specific Use by Right Winery shall annually provide data and records to the Zoning Administrator showing compliance with the above regulations related to source of produce. This documentation shall be supplied to the Township on a form approved by the Planning & Zoning Department.

(14) Natural Disaster Provisions. If crop conditions or natural disaster result in a shortage of locally-grown crop for a particular year, the Township Board may approve a larger proportion of produce grown off the land owned or leased for a specific farm operation by the same party owning and operating the a farm operation for that particular year, provided that verification of such conditions are presented to the Township Board by a public organization representing the growers of northwest Michigan that is duly recognized by the Township Board. Processed products produced in such a year shall not exceed the highest volume produced in any of the preceding 5 years.

(15) Accessory Uses. Accessory uses of a Use by Right Winery are intended to help in the promotion of Peninsula Township agriculture by identifying farm products produced within the Township, providing an educational experience describing Peninsula agriculture, and allowing consumption of Peninsula farm products by visitors to the facility.

(a) Tasting Room. A Use by Right Winery shall have not more than 1 tasting room onsite, which shall be subject to the following:

(i) The tasting room shall utilize a maximum of 2,000 square feet. A tasting room can be separate or attached to the Use by Right Winery.

(ii) An outdoor service area is permitted in addition to the square footage of the Use by Right Winery and its size shall not exceed the indoor tasting room's floor area.

(iii) Sales of wine by the glass in a tasting room is allowed pursuant to the minimum requirements of the Michigan Liquor Control Commission rules and related Michigan Department of Agriculture and Rural Development permits regarding the sales of limited food items for on-premises consumption.

(iv) The tasting room shall have the ability to include wine tours of the Use by Right Winery and/or other Peninsula agricultural locations to further promote their farm products.

(b) Retail Sales. Retail Sales shall be allowed outside of the tasting room in a separate room and may be the lesser of 500 square feet or 25 percent of the tasting room, and are subject to the following:

(i) 50 percent of the retail space shall be used to display products produced on and by the specific farm operation.

(ii) Additional merchandise sold shall be directly related to the consumption and use of the fresh and/or processed agricultural produce sold at retail.

(iii) Logo merchandise shall be allowed in an area no greater than 20 percent of the retail space and provided that the logo is prominently displayed and permanently affixed to the merchandise.

(c) Dwellings. A maximum of 1 single-family dwelling shall be allowed on a parcel dedicated to the Use by Right Winery, with a limit of 2 single-family dwellings on the total 40-acre site dedicated to the Use by Right Winery. A single-family dwelling may be allowed as part of a structure containing a Use by Right Winery provided the following requirements are met:

(i) The dwelling and Use by Right Winery combined shall comply with the setback and building area requirements established above.

(ii) The dwelling shall be the only dwelling on the host parcel.

(iii) The maximum height of the structure shall be 35 feet or 2 ½ stories whichever is less.

(d) Accessory Buildings. In addition to the Use by Right Winery's building size limitation noted above, agricultural accessory structures may be built to protect equipment and materials associated with the farm operation provided these structures are not accessible to the public.

(e) Township Wide Events. Participation in "Township Wide Events" such as "Blossom Days" as specifically approved by the Township Board shall be allowed.

(f) Guest Activity Uses. The Township Board may approve Guest Activity Uses (activities by persons who are not registered guests) as an additional accessory use, provided that all guest activity uses shall include agricultural production promotion as part of the activity and shall be subject to the following:

(i) Agricultural production promotion shall identify "Peninsula Produced" food or beverage that is consumed by the attendees, provide "Peninsula Agriculture" promotional materials, and include tours through the winery and/or other peninsula agricultural location.

(ii) Kitchen facilities shall be used for on-site food service related to guest activity uses but shall not be used as an off-site catering service.

(iii) No alcoholic beverages, except those produced on the site, are allowed with guest activity uses. If alcohol is served, it shall only be served with food.

(iv) Food served during a Guest Activity Use shall require the host operation to comply with all local health department and/or State permits and regulations.

(v) The sale of wine by the bottle during a social gathering shall not be consumed on premises.

(vi) Guest Activity Uses shall take place during normal operating hours of the Use by Right Winery and shall conclude by 9:30 p.m.

(vii) Guest Activity Uses at any single event shall be limited to the lesser of 50 people or the fire safety maximum as determined by the Fire Marshall.

(viii) Guest Activity Uses shall take place within a on the same 40-acre site as the Use by Right Winery in a designated indoor and/or outdoor area, but shall not take place within any identified tasting room area as specified on an approved site plan.

(ix) Schedules for Guest Activity Uses shall be provided to Planning & Zoning Department on a monthly basis and prior to taking place.

(x) The Use by Right Winery shall host no more than 20 Guest Activity Uses annually and there shall not be more than 2 gatherings scheduled per calendar week.

(xi) No amplified music shall be allowed to take place at a guest activity use. Additionally, any sound generated from a guest activity use must be in compliance with Peninsula Township's Noise Ordinance No. 40.

(xii) Parking to support guest activity uses shall be in compliance with *Article 9*.

(g) Temporary Structures. No temporary structures including tents or canopies are permitted on-site unless the Township Board approves the usage of such measures during the hosting of a Township wide event open to the general public such as the Blessing of the Blossoms, Harvest Days, etc.

(h) Prohibited Rentals. Rental of snowmobiles, ATVs, vehicles, boats and other marine equipment, and similar recreational vehicles in conjunction with the operation of the establishment shall be prohibited.

(i) Hours of Operation. All accessory uses shall take place during normal operating hours of the Use by Right Winery and shall conclude by 9:30 p.m.

(j) Outdoor Display Prohibited. Outdoor displays of merchandise or equipment are prohibited.

(C) Vested Interest. There shall be no vested interest in non-agricultural uses of the structures. Structures shall only be used for allowed uses in the A-1 Agriculture District in the event that the Use by Right Winery use is abandoned.

(D) Approval Process. An application in conformance with *Section 14.01* shall be submitted to and reviewed by the Zoning Administrator.

(1) A preliminary Use by Right Winery Land Use Permit shall be issued upon a showing that the minimum requirements of *Section 14.01* and this section have been met.

(2) No processing or sales of products shall take place until a final Use by Right Winery Land Use Permit has been issued by the Zoning Administrator. Such final Use by Right Winery Land Use Permit shall not be issued until copies of all permits required by State, Federal and other local licenses and permits have been submitted to the Zoning Administrator, and the Zoning Administrator has made an on-site inspection to verify compliance with all the requirements of the Zoning Ordinance.

(E) Violations and Penalties. Any violation of the Land Use Permit issued by the Zoning Administrator for this use shall, in addition to the provisions of *Section 14.07*, serve as grounds for closing the retail operation, including tasting, portions of the use by the Township Board. In the event of any such alleged violation is made in writing to the Township Board, the Township shall give written notice of such alleged violation to the Applicant at the last address furnished to the Township by the applicant. The notice shall state that unless the violation is corrected or resolved to the satisfaction of the Township Board within 30 days from the date of the notice, then the Township Board shall require the owner to close all retail sales operations on the premises, after hearing, until such time as the Township Board removes the restriction. In the event a hearing becomes necessary, the Township Board shall establish the notice requirements and such other conditions with respect to the hearing as the Township Board may deem appropriate.

Section 6.39 Winery-Chateau (currently Section 8.7.3(10)/NEW)

(A) Statement of Intent. The purpose of this section is to provide agricultural land owners within the Township an opportunity to process and sell their alcohol related value-added products upon new or existing farm operations. This type of operation is intended to promote the local agricultural production industry while preserving the rural character of the Township. It is also the intent of this section to provide Winery-Chateaus the ability to host Guest Activity Uses and overnight guests when appropriate measures are taken to manage said guest services. All land uses supported by the Winery-Chateau shall be demonstrated in a manner which blends harmoniously with the surrounding agricultural character and its land uses.

(B) Site Development Standards: In order to establish a Winery-Chateau and preserve the health, safety, and welfare of the community, the following regulations and development standards must be met:

(1) Owner-Operated. A Winery-Chateau shall be owner-operated.

(2) Minimum Lot Area. The minimum site shall be 50 acres of contiguous agriculturally-zoned land in the township, which shall be planned and developed as an integrated whole. None of the minimum 50 acres shall be used to satisfy acreage density or open space requirement of any other use in the Township while the Winery-Chateau use is in effect.

(3) Lot Width. The Winery-Chateau facility shall have at least 330 feet of frontage on a state or county road.

(4) Minimum Arable Land. Not less than 75 percent of the site shall be arable land, and not less than 65 percent of arable land of the site shall be used for the active production of perennial crops that can be used for wine production, such as fruit growing on vines or trees.

(5) Principal and Residential Support Uses.

(a) Principal Winery-Chateau Use. The Winery-Chateau shall be the principal use and building on the site and shall have an on-site resident manager.

(b) Residential Support Uses. Guest rooms, manager's residence, and single-family residences shall be allowed as support uses on the same property as the Winery-Chateau. In addition to the principal and support uses, accessory uses for each such use shall be permitted as stated herein, provided that all such accessory uses shall be no greater in extent than those reasonably necessary to serve the principal use.

(c) For purposes of computation, the principal and each residential support use identified above shall be assigned an "area equivalent" as set forth herein. The total "area equivalent" assigned to the principal uses shall not exceed the actual area of the site. "Area equivalents" shall be calculated as follows:

Deleted: It is the intent of this section to permit construction and use of a winery, guest rooms, and single family residences as a part of a single site subject to the provisions of this ordinance. The developed site must maintain the agricultural environment, be harmonious with the character of the surrounding land and uses, and shall not create undue traffic congestion, noise, or other conflict with the surrounding properties.

Deleted: The use shall be subject to all requirements of Article VIII, Section 8.5, Food Processing Plants in A-1 Districts and the contents of this subsection. Data specified in Section 8.5.2, Required Information, shall be submitted as a basis for judging the suitability of the proposed plan. Each of the principal uses shall be subject to the terms and conditions of this ordinance except as specifically set forth herein.

Deleted: fifty (

Deleted:)

Deleted: All of the principal and accessory uses shall be set forth on the approved site plan.

Deleted: two hundred (200)

Deleted: seventy-five (

Deleted: %)

Deleted: permitted upon the site shall be a winery

Deleted:

Deleted: single

Deleted: winery

Deleted: ,

Deleted: in sub-section (d)

(i) Winery. 5 acres or the actual area to be occupied by the winery including parking, whichever is greater

(ii) Manager's Residence. 5 acres. The manager's residence shall not contain or be used for rental guest rooms.

(iii) Single-Family Residences: 5 acres. The number of single family residences shall not exceed 6.

(iv) Guest Rooms. 5 acres for each 3 rooms, not to exceed a total of 12 guest rooms. All guest rooms shall have floor areas greater than 250 square feet. Maximum occupancy shall be limited to 5 persons per unit. No time sharing shall be permitted.

(6) Setbacks. Structures and parking areas supporting the Winery-Chateau shall maintain the following minimum setbacks:

(a) Front Yard Setback: 50 feet.

(b) Side and Rear Yard Setback: 100 feet.

(c) Minimum of 200 feet from a preexisting residential structure on neighboring property.

(7) Building Areas. The building area utilized to support the Winery-Chateau may be comprised of a single building or multiple buildings on the same site. If the Winery-Chateau is established within a preexisting structure, then the operation may utilize the entirety of said structure if the following regulations can be met:

(a) The applicant can demonstrate that the proposed structure is in compliance with the standards of the Grand Traverse Construction Code Office, Health Department, Road Commission and any other applicable permitting agencies; and

(b) The structure's location is in compliance with the underlying district's zoning setbacks.

(8) Parking and Access. Parking and access drives shall be a paved and striped with the appropriate size and bulk requirements of *Article 9*. Site access shall be limited to 2 access points off of a public road and subject to approval by Grand Traverse County Road Commission, MDOT, or any other applicable government agency.

(9) Lighting. All lighting shall conform to the requirements of *Section 8.07*.

(10) Signs. Signs as allowed by *Article 11*.

(11) Fencing and Planting Buffer. In addition to the requirements of *Article 10*, in the event that the Township Board determines that noise generation may be disturbing to neighbors or that the establishment is in an area where trespass onto adjacent properties

Deleted: Five
Deleted: (5)
Deleted: Five (
Deleted:)
Deleted: Five (
Deleted:)
Deleted: six (
Deleted:)
Deleted: Five
Deleted: (5)
Deleted: twelve (
Deleted:)
Deleted: two hundred fifty (
Deleted:)
Deleted: five (
Deleted:)
Deleted: Section 7.14. (REVISED BY AMENDMENT 175B)
Deleted: Section 7.11
Deleted: I

is likely to occur, then the Township Board may require that additional fencing and/or plant buffering be constructed and maintained.

(12) Well and Septic System. Proof of evaluation of the well and septic system by the Health Department and conformance to that agency's requirements shall be supplied by the owner.

(13) Setback Between Guest Accommodations and Agricultural Crops. A 200-foot setback shall be maintained between guest accommodations and facilities and agricultural crops, unless it is demonstrated that a lesser setback can be maintained which will provide for an equal level of protection from agricultural activities to residents, visitors, and guests of the Winery-Chateau. Upon such demonstration, the Township Board may permit a lesser setback.

(14) Source of Produce:

(a) A majority of the produce processed and sold shall be grown on the land owned or leased for the associated farm operation by the same party owning and operating the specific Winery-Chateau.

(b) Alcoholic beverages shall be produced and bottled at the Winery-Chateau and in compliance with all applicable Federal and State laws.

(c) Sparkling wine or sparkling juices may be "finished" and bottled off site.

(d) Dried fruit, a minimum of 85 percent by weight which is grown on Old Mission Peninsula and a minimum of 50 percent by weight which is grown on the associated farm, may be dried off premises and sold in the Winery-Chateau retail room, provided no more than the amount of fruit sent out for this processing is returned for retail sale.

(15) Data & Records. The owner of the Winery-Chateau shall annually provide data and records on to the Zoning Administrator showing compliance with the above regulations related to source of produce. This documentation shall be supplied to the Township on a form approved by the Planning & Zoning Department.

(16) Natural Disaster Provisions. If crop conditions or natural disaster result in a shortage of locally-grown crop for a particular year, the Township Board may approve a larger portion of produced grown off the land owned or leased for a specific farm operation by the same party owning and operating the farm operation for that particular year, provided that verification of such conditions are presented to the Township Board by a public organization representing the fruit growers of northwest Michigan that is duly recognized by the Township Board. Processed products produced in such a year shall not exceed the highest volume produced in any of the preceding 5 years.

(17) Accessory Uses. Accessory uses of a Winery-Chateau are intended to help in the promotion of Peninsula Township agriculture by identifying farm products produced within the Township, providing an educational experience describing Peninsula

Deleted: a

Deleted: ing

Deleted: two hundred (

Deleted:)

Deleted: Documentation

Deleted: an annual basis

Deleted: that:¶
<#>¶
<#>In addition to the agricultural production on the minimum acreage required for the Winery-Chateau, the winery has grown grapes in Peninsula Township or purchased grapes grown in Peninsula Township equal to 1.25 tons of grapes for each person allowed to participate in Guest Activity Uses.¶
<#>¶
<#>That all the grapes from (a) above plus the production on the minimum acreage required for the Winery-Chateau have been processed in the winery.¶

Deleted: fruit

Deleted: ;

Deleted: reduce the requirement for the amount of grapes

Deleted: such as facilities, meeting rooms, and food and beverage services shall be for registered guests only. These uses shall be located on the same site as the principal use to which they are accessory and are included on the approved Site Plan. Facilities for accessory uses shall not be greater in size or number than those reasonably required for the use of registered guests.

agriculture, and allowing consumption of Peninsula farm products by visitors to the facility.

(a) Tasting Room.

(i) A tasting room can be separate or attached to the Winery-Chateau.

(ii) An outdoor tasting area is permitted as part of the Winery-Chateau and can be no larger than 4,000 square feet.

(iii) Sales of wine by the glass in the tasting room is allowed pursuant to the minimum requirements of the Michigan Liquor Control Commission rules and related Michigan Department of Agriculture and Rural Development permits regarding the sales of limited food for on-premises consumption.

Deleted: The Liquor Control Commission and the Michigan Department of Agriculture shall control licenses and compliance. (REVISED BY AMENDMENT 181)

(iv) The tasting room shall have the ability to include wine tours of the Winery-Chateau and/or other Peninsula agricultural locations to further promote their farm products.

(b) Retail Sales. Retail Sales shall be allowed outside of the tasting room in a separate room and may be the lesser of 1,000 square feet or 25 percent of the tasting room, and are subject to the following:

(i) 50 percent of the retail space shall be used to display products produced on and by the specific farm operation.

(ii) Additional merchandise sold shall be directly related to the consumption and use of the fresh and/or processed agricultural produce sold at retail.

(iii) Logo merchandise shall be allowed in an area no greater than 20 percent of the retail space and provided that the logo is prominently displayed and permanently affixed to the merchandise.

(c) Bed and Breakfasts. The operation of a Bed and Breakfast may take place upon the 50-acre site hosting the Winery-Chateau.

(i) If the Winery-Chateau incorporates a Bed and Breakfast operation as a component of the business, then the resident onsite manager's dwelling shall be located in the same building as the Bed and Breakfast. The resident on-site manager's dwelling shall not count as 1 of the possible guest rooms available to the general public.

(ii) A Bed and Breakfast operation shall be allocated 1 guest room per available development right(s) assessed when application for Winery-Chateau is made, with a maximum of 12 rooms. Each guest room shall be a minimum of 250 square feet in size and support no more than 5 people per guest room.

(iii) In addition to the processing facility's parking requirements, 1 parking space shall be required for each guestroom.

(iv) Food service shall be in compliance with local health department and/or State licensing requirements as they relate to Bed and Breakfasts and shall be exclusive to guests staying within the Bed and Breakfast.

(v) All transient lodging facilities shall conform to the Michigan State Construction Code section regulating fire safety as well as the following regulations:

a. An on-site water supply shall be available and meet the uniform published standards of the Peninsula Township Fire Department.

b. A floor plan drawn to an architectural scale of not less than 1/8 inch = 1 foot shall be on file with the Fire Department.

c. Each operator of a transient lodging facility shall keep a guest registry which shall be available for inspection by the Zoning Administrator and police and fire officials at any time.

d. Master keys for all rooms shall be available at all times.

(d) Accessory Buildings. In addition to the Winery-Chateau's building size limitation noted above, agricultural accessory structures may be built to protect equipment and materials associated with the farm operation provided these structures are not accessible to the public.

(e) Township Wide Events. Participation in "Township Wide Events" such as "Blossom Days" as specifically approved by the Township Board shall be allowed.

(f) Guest Activity Uses. The Township Board may approve Guest Activity Uses (Activities by persons who may or may not be registered guests) as an additional Support Use, subject to the following:

(i) Guest Activity Uses are intended to help in the promotion of Peninsula agriculture by identifying "Peninsula Produced" food or beverage for consumption by the attendees, providing "Peninsula Agriculture" promotional brochures, maps and awards, and including tours through the winery and/or other Peninsula agriculture locations.

(ii) The number of persons allowed to participate in Guest Activity Uses shall be determined as follows:

a. The Township Board as part of the Special Use Permit approval process shall determine the room(s) provided and a maximum number of attendees for Guest Activity Uses.

Deleted: "

Deleted: (ADDED BY AMENDMENT 141)

Deleted: :¶

Deleted: I

Deleted: ¶
<#>¶
P

Deleted: ;

Deleted: /or¶

Deleted: ¶
I

b. The maximum number of attendees shall not exceed 1 attendee for each 15 square feet of the room or rooms provided for Guest Activity Uses. These rooms shall exclude guest rooms, rest rooms, hallways, stairways, entries, spaces used in the normal operation of wine making and storage, out of doors areas, and any other spaces not usual for guest assembly. In no case will the number exceed 115 or the Fire Marshall maximum occupancy, whichever is less.

c. The maximum number of attendees may be less than, but not more than, the maximum number described in (b) above at the discretion of the Township Board based on possible adverse impacts on adjacent properties, lack of parking spaces, or other site specific conditions.

d. A building floor plan showing spaces for all approved uses including the maximum capacity of each shall be attached to the site plan.

(iii) Kitchen facilities may be used for on-site food service related to Guest Activity Uses but shall not be used as an off-site catering service.

(iv) No alcoholic beverages, except those produced on the site, are allowed with Guest Activity Uses. If alcohol is served, it shall only be served with food.

(v) Food served during a Guest Activity Use shall require the host operation to comply with all local health department and/or State permits and regulations.

(vi) Sales of wine by the bottle during a social gathering shall not be consumed on premises.

(vii) Guest Activity Uses shall take place within a designated indoor and/or outdoor area as specified on the Special Use Permit site plan and located on the 50 acre site as the Winery-Chateau.

(viii) The Township Board may consider seasonal weighting of the frequency and/or a maximum number of Guest Activity Uses during the year.

(ix) Schedules for Guest Activity Uses shall be provided to the Planning & Zoning Department on a monthly basis and prior to taking place.

(x) No amplified music shall be allowed to take place at a Guest Activity Use. , Additionally, any sound generated from a Guest Activity Use must be in compliance with Peninsula Township's Noise Ordinance No. 40.

(xi) Parking to support Guest Activity Uses shall be in compliance with *Article 9*.

(xii) Guest Activity Uses do not include wine tasting and such related promotional activities as political rallies, winery tours, and free entertainment (Example - "Jazz at Sunset") which are limited to the tasting room and for which no fee or donation of any kind is received.

Deleted: one

Deleted: fifteen (

Deleted:)

Deleted: one hundred-eleven (111

Deleted:)

Deleted: not

Deleted: for

Deleted: glass or sales of

Deleted: s of wine for ON PREMISES consumption are NOT ALLOWED except as provided in Section 2 (e) above

Deleted: instrumental

Deleted: is

Deleted: however amplified voice and recorded background music is allowed, provided the amplification level is no greater than normal conversation at the edge of the area designated within the building for guest purposes

(xiii) Guest Activity Uses are in addition to accessory uses for registered guests that are otherwise allowed.

(xiv) Overnight stays at the Winery-Chateau are not required for these Guest Activity Uses.

(xv) Guest Activity Uses do not include entertainment, weddings, wedding receptions, family reunions, or sale of wine by the glass.

(g) Limited Food Service. No food service other than as allowed above or as allowed for wine tasting may be provided by the Winery-Chateau.

(h) Temporary Structures. No temporary structures including tents or canopies are allowed on-site unless the Township Board approves the usage of such measures during the hosting of a Township wide event open to the general public such as the Blessing of the Blossoms, Harvest Days, etc.

(i) Rental of Recreation Equipment: Rental of snowmobiles, ATVs or similar vehicles, boats and other marine equipment, or other recreational vehicles in conjunction with the operation of the establishment shall be prohibited.

(j) Hours of Operation. All accessory uses, with the exception of overnight guest accommodations, shall take place during normal operating hours of the Winery-Chateau and shall conclude at 9:30 p.m.

(k) Outdoor Display. No outdoor displays of merchandise, equipment or signs are allowed.

(C) Additional Conditions. Special Use Permits approved under this section may list any number of restrictions or requirements approved by the Township Board such as additional setback requirements, days of the week restrictions, number of guest activity days per year, or other requirements deemed beneficial to the township or its residents.

(D) Violations. Any violation of the Special Use Permit issued for a Winery-Chateau shall, in addition to the provisions of *Section 14.07(A)*, Violations and Penalties, serve as grounds for closing the Guest Activity Uses use by the Township Board. In the event any such alleged violation is made in writing to the Township Board, the Township shall give written notice of such alleged violation to the Applicant at the last address furnished to the Township by the Applicant. The notice shall state that unless the violation is corrected or resolved to the satisfaction of the Township Board within 30 days from the date of the notice, the Township Board shall require the Owner to close all Guest Activity Uses on the premises, after hearing, until such time as the Township Board removes the restriction. In the event a hearing becomes necessary, the Township Board shall establish the notice requirements and such other conditions with respect to the hearing as the Township Board shall deem appropriate.

Deleted: If wine is served, it shall only be served with food and shall be limited to Old Mission Peninsula appellation wine produced at the Winery, except as allowed by Section 6 below.

Deleted: except that

Deleted: may approve the reasonable use of temporary structures tents or canopies in conjunction with community events approved in (b) above.

Deleted: Hours of operation for Guest Activity Uses shall be as determined by the Town Board, but no later than 9:30 PM daily.

Deleted: this use

Deleted: ¶

¶

<#>Activities and Outdoor Gatherings: Activities made available to registered guests shall be on the site used for the facility or on lands under the direct control of the operator either by ownership or lease. Outdoor activities shall be permitted if conducted at such hours and in such manner as to not be disruptive to neighboring properties.¶

¶

<#>Intent.¶

¶

<#>The current Winery-Chateau section of the ordinance requires 75% of the site to be used for the active production of crops that can be used for wine production such as fruit growing on vines or trees, but does not require that any of the wine produced on the site be made from wine fruit grown on Old Mission Peninsula. To assure that, in addition to the minimum parcel size required for a Winery-Chateau, there is additional farm land in wine fruit production in Peninsula Township if Guest Activity Uses are allowed to take place at a Winery-Chateau facility.¶

¶

<#>Guest Activity Uses are limited to (2) below.¶

¶

<#>Fees may be charged for these Guest Activity Uses.¶

¶

<#>**Uses Allowed.** Notwithstanding Section 8.7.3 (10) (m); the following Guest Activity Uses may be approved with a Special Use Permit by the Township Board:¶

¶

<#>Wine and food seminars and cooking classes that are scheduled at least thirty days in advance with notice provided to the Zoning Administrator. Attendees may consume food prepared in the class.¶

¶

<#>Meetings of 501- (C)(3) non-profit groups within Grand Traverse County. These activities are not intended to be or resemble a bar or restaurant use and therefore full course meals are not allowed, however light lunch or buffet may be served.¶

¶

<#>Meetings of Agricultural Related Groups that have a direct relationship to agricultural production, provided that:¶

¶

<#>The meetings are scheduled at least one month in advance with the Zoning Administrator given adequate advance notice of the scheduling so that the Zoning Administrator can give prior approval;¶

¶

<#>The Zoning Administrator shall use the following types of Agricultural Related Groups as a guide for determinin ...

Section 6.40 Wind Energy Conversion Systems (currently Section 8.7.3(8))

(A) WECS shall be allowed in all zoning districts.

(B) In addition to the requirements of *Section 14.03*, the site plan of the property shall show the location of overhead electrical transmission or distribution lines, whether utilized or not, and the location of the WECS with its specific dimensions, including the entire area through which the rotor(s) may pass, the location of any guy wires or other support devices, and the location of all occupied dwelling units within 300 feet of the WECS.

(C) Each special use permit application shall be accompanied by a complete set (either the original or an accurately reproduced copy) of the manufacturer's instructions which shall, at a minimum, include the following:

(1) A standard foundation and anchor design or specifications for normal soil conditions; and

(2) A detailed parts list; and

(3) Clearly written detailed instructions for the assembly, installation, check out, operation and maintenance of the WECS on site; and

(4) The list of warning documents required by *Section 6.40(H)* herein; and

(5) Grounding and lighting procedures protection which follow the National Electrical Code, Articles 250 (Grounding) and 280 (Lightning Arresters); and

(6) Underwriters label, where appropriate; and

(7) Proof of insurance.

(D) **Electromagnetic Interference.** The entire WECS (including turbines, alternators, generators, and interconnect systems) shall be filtered and/or shielded to prevent the emission of generated radio frequency energy which would cause any interference with radio, and/or television broadcasting or reception, and shall comply with Federal Communication Rules, 47 CFR, parts 15 (including sub parts A and F) and 18 (including sub-parts A, D and H).

(E) **Noise.** The maximum level of noise permitted to be generated by any WECS shall be 50 decibels, as measured on the DBA scale, measured at the property line nearest the WECS.

Deleted: fifty (

Deleted:)

(F) **Setbacks.** No WECS shall be erected such that any portion of the tower or turbine is closer to utility lines and/or property lines than the total distance of the height of the tower and rotor combined.

(G) **Height.** The maximum allowable height, including rotor blade length of horizontal wind turbines, of any WECS shall be 100 feet, unless otherwise prohibited by State of Federal statutes or regulations or granted a variance by the Board of Appeals.

Deleted: one hundred (

Deleted:)

(H) Labeling.

(1) The following information shall be provided on labels attached to the WECS tower subsystem in a visible, easily accessible location:

(a) Equipment weight of the tower subsystem;
(b) Manufacturer's name and address;
(c) Model number;
(d) Serial number;
(e) The following tower warning label or equivalent warning: Installation and Maintenance of This Product near Power Lines is a Danger. For Your Safety Follow the Installation and Maintenance Instructions.
(f) The survival wind speed in miles per hour and meters per second.
(g) Name of installer.
(h) Name of person responsible for maintenance.
(i) Emergency telephone number in force for G and H above.

(2) The following information shall be provided on labels attached to the WECS power conversion subsystem in a visible, easily accessible location:

(a) Maximum power input (KW); rated voltage (volts) and rated current output (amperes) of the generator, alternator, etc.
(b) Manufacturer's name and address;
(c) Model number;
(d) Serial number;
(e) Emergency and normal shutdown procedures;
(f) Underwriters label where appropriate.

(I) Ground Clearance. For both horizontal and vertical axis turbines, and WECS rotor shall be located on the tower or support such that the minimum blade clearance above ground level is 20 feet.

(J) Accessibility. Towers shall be designed and constructed in such a manner that climbing devices are only accessible with a separate ladder to a height of 12 feet.

(K) Interconnected WECS. In the case of WECS to be interconnected with the power grid of the local electric utility, the applicant shall provide proof of written notice to the utility of the proposed interconnection and the utility's response thereto. The resident shall comply with all requirements of the servicing utility if the WECS is interfaced with the utility grid. The utility will install appropriate electric metering (for sellback or non-sellback) and the customer will be required to install a disconnecting device adjacent to the electric meter(s).

(L) Vibration. Under no circumstances shall a WECS produce vibrations humanly perceptible beyond the lot boundaries.

Section 6.41 Wireless Communications Facilities (currently Sections 7.12 and 8.7.3(11))

(A) Intent. The Telecommunications Act of 1996, Federal Communications Commission (FCC), and Michigan Zoning Enabling Act set forth provisions concerning placement, location and construction of towers and related facilities for wireless communications services.

In order that such towers not cause visual pollution or create a safety hazard or reduce property values on adjacent properties, reasonable regulations for the location, use of existing structures (e.g., water towers, school and church steeples, tall buildings), design of structures and towers, is appropriate. Wireless communications service are specifically determined to NOT be essential services nor to be public utilities as such terms are used in this Ordinance.

Peninsula Township has adopted policies and the voters have approved increased property taxes to purchase development rights on certain farmlands to preserve the agricultural industry, retain the rural character of the township and preserve the unique scenic views of farms and shoreline. A considerable amount of property value in Peninsula Township is directly related to these efforts to retain the scenic qualities, agricultural land and management of growth in the township. It is consistent with these policies and programs to allow towers to be constructed in locations and to such heights that they do not interfere with these efforts to preserve the scenic views and township character.

It is the intent of these regulations to allow antennae to be located on monopoles as short as possible so as to maintain property values on surrounding properties, not impair scenic views, and provide reasonable service to Peninsula Township residents. It is not the intent to create "antennae farms" with a number of monopoles and antennae in a small area.

Taller towers may be allowed if it is proven to the satisfaction of the Township Board that reasonable service to Peninsula Township residents cannot be provided by lower monopoles.

It is not the intent to regulate amateur radio antennae under this section.

(B) General Requirements.

(1) Option A. Wireless communications facilities are a permitted use of property and are not subject to special land use approval or any other approval if all of the following requirements are met:

(a) Colocation. The wireless communications facilities may be colocated on an existing wireless communications support structure or in an existing equipment compound, provided the proposed colocation complies with the terms and conditions of any previous final zoning approval by the Township and that the colocation will not do any of the following:

(i) Increase the overall height of the wireless communications support structure by more than 20 feet or 10 percent of its original height, whichever is greater.

Commented [PS44]: Many of these standards have been changed to comply with recently-adopted requirements of the Michigan Zoning Enabling Act and FCC regulations. Additional standards are included to streamline the approval process and clearly communicate design requirements.

Deleted: 1966 as amended February 8,

Deleted: s

Deleted: personal

Deleted: Personal w

Deleted: ham

(ii) Increase the width of wireless communications support structure by more than the minimum necessary to permit colocation.

(iii) Increase the area of the existing equipment compound to greater than 2,500 square feet.

(b) Existing Facilities. The existing wireless communications support structure or existing equipment compound is in compliance with the Zoning Ordinance or was approved by the Township.

(2) Option B. Wireless communications equipment is subject to special land use approval, in accordance with *Section 14.03* of the Zoning Ordinance, if the equipment does not meet requirements of *Section 6.41(B)(1)(a)(i), (ii),* and *(iii),* but the equipment meets all of the following requirements:

(a) The wireless communications equipment will be colocated on an existing wireless communications support structure or in an existing equipment compound.

(b) The existing wireless communications support structure or existing equipment compound is in compliance with the Township Zoning Ordinance or was approved by the Township.

(3) Option C. Wireless communication equipment is subject to special land use approval, in accordance with *Section 14.03* of the Zoning Ordinance if the proposal does not involve colocation (e.g., a new facility).

(C) Approval Procedures. The following procedures have been established to achieve approval of a proposed wireless communications facility:

(1) Option A. Option A wireless communication equipment plans require approval by the Zoning Administrator, as delegated by the Township Board.

(2) Option B. Option B wireless communication equipment proposals require special land use approval. Accordingly, such proposals are subject to the procedures in *Section 14.03* and the following special procedures:

Steps	Action
Step 1	Applicant submits plan and $1,000 fee.
Step 2	Within 14 business days Township Zoning Administrator and/or Planning Director determines if application is complete, as delegated by the Township Board.
Step 3	If application is incomplete, Zoning Administrator and/or Planning Director notifies applicant.
Step 4	If application is complete, Zoning Administrator and/or Planning Director initiates Special Land Use review by scheduling special land use public hearing. Special land use review must be complete 60 days after the application is considered complete.

Commented [PS45]: The Michigan Zoning Enabling Act states that the authority responsible for approving special land uses shall determine whether the application is administratively complete within 14 business days. However, this is an insufficient period of time for a Planning Commission or legislative body to make this determination. Therefore, we recommend that the authority to determine whether to deem an application administratively complete be delegated to the Planning Director and/or Zoning Administrator.

Step 5	Township Zoning Administrator and/or Planning Director reviews plan, transmits letter to Planning Commission.
Step 6	Planning Commission reviews plan, makes recommendation to Township Board.
Step 7	Township Board approves or denies application.

(3) Option C. Option C wireless communication equipment proposals require special land use approval. Accordingly, such proposals are subject to the procedures outlined for Option B, except that in Step 4 the special land use review must be complete not more than 90 days after the application is considered complete.

(D) Standards and Conditions. All applications for wireless communication facilities shall be reviewed in accordance with the standards in this Ordinance that apply generally to site plan review and special land use review, and subject to the following standards and conditions. If approved, such facilities shall be constructed and maintained in accordance with such standards and conditions and any additional conditions imposed by the Planning Commission and Township Board.

(1) Right-of-Way and Access Easement Location Prohibited. Wireless communication towers and equipment shelter buildings shall not be placed in any road right-of-way or in any easement for road purposes.

(2) Zoning Districts. Wireless communication towers and facilities may be located only in the Agricultural A-1 Zone or the Commercial C-1 Zone.

(3) Public Health and Safety. Facilities and/or support structures shall not be detrimental to the public health, safety and welfare.

(4) Harmony with Surroundings and Prohibited Location in Scenic Areas. The entire facility must be aesthetically and architecturally compatible with its environment. No tower shall be placed in a scenic view area as shown on the Scenic View Map adopted or subsequently amended as part of the Peninsula Township Master Plan. However, if the tower does not exceed 40 feet in height, it may only be located in a prime scenic view if its location is adjacent to existing structures, is backed by trees or other vegetation, or is otherwise located so that in the sole discretion of the Planning Commission and Township Board it does not impair the scenic view.

(5) Compliance with Federal, State and Local Standards. Wireless communication facilities shall comply with applicable federal and state standards, including requirements promulgated by the Federal Aviation Administration (FAA), Federal Communication Commission (FCC), and Michigan Aeronautics Commission. Wireless communication support structures shall comply with all applicable building codes. All tower proposals of more than 35 feet shall be submitted to the Cherry Capital Airport Commission and FAA for review and approval prior to approval by Peninsula Township.

(6) Maximum Height. The maximum height of a new or modified support structure and antenna shall be no more than required for reasonable communication by the applicant (and by other entities to collocate on the structure) according to engineering

Deleted: Telecommunication
Deleted: Antenna T
Deleted: Equipment
Deleted: Shelter
Deleted: Buildings
Deleted: Such
Deleted: Comprehensive
Deleted: thirty-five (
Deleted:)
Deleted: Tower
Deleted: may

requirements for a specific site or the technical capabilities of the antennas being mounted. Applicants shall demonstrate a justification for the proposed height of the structures and an evaluation of alternative designs which might result in lower heights. The Township may engage the services of an independent technical and engineering evaluation of the need for a tower. Where the independent evaluation shows that service can be provided by a lower tower or colocation on an existing tower, the tower shall be lowered accordingly or the equipment must be collocated on an existing tower. In no case shall the maximum height of a new or modified support structure and antenna exceed 120 feet. Higher towers may be permitted, however, only if necessary to achieve colocation. The buildings, cabinets, and other accessory structures shall not exceed a height of 12 feet.

Deleted: applicant shall provide funds to the Township determined by the Township Board to be sufficient to acquire

Deleted: ny

Deleted: in excess of 40 feet

Deleted: forty foot or

Deleted: no tower in excess of forty (40) feet shall be allowed.

(7) **Minimum Setbacks.** All setbacks for the zoning district shall be met and in addition, no new or modified tower shall be placed closer than the total height of the tower from any lot line abutting a residentially-zoned district and 50 percent of the tower's height from any other lot line.

Deleted: %

Deleted: property

Buildings and facilities accessory to the wireless communication facility (other than the support structure) shall comply with the required setbacks for principal buildings specified in the Schedule of Regulations for the zoning district in which the facility is located.

(8) **Access.** Unobstructed permanent access to the support structure shall be provided for operation, maintenance, repair and inspection purposes, which may be provided through or over an easement. The permitted type of surfacing, dimensions and location of such access route shall be subject to approval by the Planning Commission and Township Board, based on evaluation of the location of adjacent roads, layout of buildings and equipment on the site, utilities needed to service the facility, proximity to residential districts, disturbance to the natural landscape, and the type of vehicles and equipment that will visit the site.

(9) **Minimum Lot Area.** Wireless communication towers and facilities shall be placed on parcels (whether the land is owned or leased by the tower owner), that have an area no less than the minimum parcel size for the district. The division of property for the purpose of locating a wireless communication facility shall be permitted only if all zoning requirements, including lot size and lot width requirements, are met.

Deleted: Such t

(10) **Equipment Enclosure.** If an equipment enclosure is proposed as a building or ground-mounted structure, it shall comply the required setbacks and other requirements specified for principal buildings in the Schedule of Regulations for the zoning district in which the facility is located. The use of compatible materials such as wood, brick, or stucco is required for associated support buildings, which shall be designed to architecturally match the exterior of residential structures within the neighborhood. In no case will metal exteriors be allowed for accessory buildings. If an equipment enclosure is proposed as a roof appliance on a building, it shall be designed, constructed and maintained to be architecturally compatible with the principal building. The service building shall be no larger than necessary to house the equipment.

Deleted: and meets all setback requirements of this Ordinance

(11) Design Requirements. The support structure and all accessory buildings shall be designed to minimize distraction, reduce visibility, maximize aesthetic appearance, and ensure compatibility with surroundings. Accordingly, support structures shall be painted with a rust preventative paint of an appropriate color to harmonize with the surroundings and shall not have lights unless required otherwise by the Federal Aviation Administration (FAA). Equipment buildings shall have a brick exterior. No signs or logos visible from off-site shall be permitted on a support structure. The Township Board may, at its sole discretion, require that the tower be camouflaged to be less obtrusive.

(12) Fencing. The tower and its accessory buildings shall be enclosed by a vinyl-coated chain link fence having a maximum height of 6 feet with a locked gate.

(13) Structural Integrity. Wireless communication facilities and support structures shall be constructed and maintained in structurally sound condition, using the best available technology, to minimize any threat to public safety.

(14) Maintenance. A plan for the long term, continuous maintenance of the facility shall be submitted. The plan shall identify who will be responsible for maintenance, and shall include a method of notifying the Township if maintenance responsibilities change.

(15) Screening. The fenced site shall be completely screened on all sides by evergreen screening consisting of upright arborvitae ("Nigra," "Techny," or "Emerald") planted no farther than 3.5 feet apart. The plants shall be at least 6 feet in height at the time of planting. Other evergreen trees or shrubs may be permitted, provided that the Planning Commission and Township Board finds that the substitute plant material will provide a complete screen around the facility. The Township Board may require additional landscape screening of the service building and fencing.

(16) Underground Wires. With the exception of connecting wires between the equipment enclosure building and the tower via 1 ice bridge not higher than 12 feet in height, all other connecting wires from towers to accessory buildings shall be underground. All electrical and other service wires to the facility shall be underground.

(17) Monopole Tower Only. The tower itself must be of monopole design, and there shall be no guyed or lattice towers.

(18) Lighting. Lighting shall be limited to that which is absolutely necessary and required by appropriate agency and shall conform to the requirements of *Section 8.07*. Strobe lights are prohibited.

(E) Collocation Provisions. In order to maximize the efficiency of the provision of telecommunication services, while also minimizing the impact of such facilities on Peninsula Township, co-location, or the provision of more than 1 antenna on a single tower may be allowed and/or required by the Township Board.

(1) The Applicant shall be required to provide information regarding the feasibility of co-location at proposed sites. Factors to be considered in determining feasibility of co-sharing include available space on existing towers, the tower owner's ability to lease

Deleted: d

Deleted: with no less than a six

Deleted: foot

Deleted: safety fence

Deleted: All

Deleted: s

Deleted: in addition:¶
<#>¶
(i) S

Deleted: Section 7.14

Deleted: and ¶
(ii) .

Deleted: shall not be allowed

Deleted: (Revised by Amendment 175B)

Deleted: one

space, the tower's structural capacity, radio frequency interference, geographic service area requirements, mechanical or electrical incompatibilities, the comparative costs of co-location and new construction, and any FCC limitations on tower sharing.

(2) The applicant shall be required to send a certified mail announcement to all other tower users in the area, stating their citing needs and/or sharing capabilities in an effort to encourage tower sharing. The applicant shall not be denied or deny space on a tower unless mechanical, structural, or regulatory factors prevent them from sharing.

(3) Further the applicant may be required to provide a letter of intent to lease excess space on a facility and commit itself to:

(a) Respond to any requests for information from another potential shared use applicant;

(b) Negotiate in good faith and allow for leased shared use if an applicant demonstrates that it is technically practicable, and;

(c) Make no more than a reasonable charge for a shared use lease.

(F) **Removal.** A condition of every approval of a wireless communication facility shall be adequate provision for removal of all or part of the facility by users and owners upon the occurrence of one or more of the following events:

(1) The maximum time which an unused tower may stand is 12 months. The applicant or owner is responsible for the removal of an unused tower. Failure to do so shall be sufficient for the Township to remove the structure according to the provisions under the Dangerous Buildings Ordinance adopted by the Township. For purposes of this section, the removal of antennas or other equipment from the facility, or the cessation of operations (transmission and/or reception of radio signals) shall be considered as the beginning of a period of nonuse.

Deleted: of over forty feet

Deleted: twelve (

Deleted:)

(2) 12 months after new technology is available at reasonable cost, as determined by the Township Board, which permits the operation of the communication system without the requirement of the support structure.

(a) The situations in which removal of a facility is required, as set forth in *Section 6.41(F)(1)* above, may be applied and limited to portions of a facility.

(b) Upon the occurrence of one or more of the events requiring removal, the property owner or persons who had used the facility shall immediately apply for any required demolition or removal permits, and immediately proceed with and complete the demolition, removal, and site restoration.

(c) If the required removal of a facility or a portion thereof has not been lawfully completed within 60 days of the applicable deadline, and after at least 30 days written notice, the Township may remove or secure the removal of the facility or required portions thereof, with its actual cost and reasonable administrative charge

to be drawn or collected and/or enforced from or under the security posted at the time application was made for establishing the facility.

(G) Application Requirements. Applications shall include the following in addition to any other specific requirements under *Section 14.02*;

Deleted: Section 8.1.

(1) Evidence of Ownership or Lease. Evidence of ownership or lease of the property on which the facility is to be placed.

(2) Name and Address. Name and address of the proposed owner and/or operator of the site.

(3) Service Requirements. Engineering requirements for the service to be provided at the site.

(4) Contact Person. Name, address, and phone number of the person to contact for engineering, maintenance, feasibility of co-location as provided in this section, and other notice purposes. This information shall be continuously updated during all times the facility is on the premises.

Deleted: and

Deleted: including

Deleted: responsible for determining

(5) Site Plan. Site plan showing location of all proposed and existing structures on the property, including the location, size, and screening of all buildings, outdoor equipment, and structures.

(6) Landscaping Plan. A detailed landscaping plan illustrating the number, species, location, and size at the time of planting of all proposed trees and shrubs. The purpose of landscaping is to provide screening and aesthetic enhancement for the structure base, accessory buildings and enclosure.

(7) Design of Structures. Preliminary design of all proposed structures.

(8) Surrounding Property Owner Information. Name and address of all adjacent property owners within 300 feet of the property.

(9) Structural Specifications. Structural specifications for the support structure and foundation shall be submitted for review, including a registered Engineer's certification of the design and safety of the proposed tower to withstand winds of 100 miles per hour. The structural specifications shall state the number of various types of antennae capable of being supported on the structure. A soils report prepared by a geotechnical engineer licensed in the State of Michigan shall also be submitted confirming that the soils on the site will support the structure. Structural plans shall be subject to review and approval by the Township Engineer.

Deleted: Registered

(10) Security. The application shall include a description of security to be posted immediately upon issuance of a building permit for the facility to ensure removal of the facility when it has been abandoned or is no longer needed, as previously noted. The amount of security shall be determined by the Township Engineer. In this regard, the security shall, at the election of the applicant, be in a form approved by the Township Attorney and recordable

at the office of the Register of Deeds, establishing a promise of the applicant and owner of the property to remove the facility in a timely manner as required herein, with the further provision that the applicant and owner shall be responsible for the payment of any costs and attorney's fees incurred by the Township in securing removal.

(11) Service Area Documentation. The application shall include a map showing existing and known proposed wireless communication facilities in the Township and in areas surrounding communities, which are relevant in terms of potential colocation or in demonstrating the need for the proposed facility. If such information is on file with the community, the applicant shall be required only to update as needed. Any such information which is a trade secret and/or other confidential commercial information which, if released would result in commercial disadvantage to the applicant, may be submitted with a request for confidentiality in connection with the development of governmental policy {MCL 15.243(l)(g)}. This ordinance shall serve as the promise to maintain confidentiality to the extent permitted by law. The request for confidentiality must be prominently stated in order to bring it to the attention of the Township.

Deleted: <#>The Planning Commission shall determine the following conditions have been met in order to approve an application. (REVISED BY AMENDMENT NO. 129)¶

¶

<#>The tower is not located in a prime scenic view as shown on the Scenic View Map adopted or subsequently amended as part of the Peninsula Township Master Plan, or; the tower is located in a prime scenic view but its location is adjacent to existing structures, is backed by trees or other vegetation, or is otherwise located so that in the sole discretion of the Planning Commission it does not impair the scenic view.¶

¶

<#>Antennae and/or repeaters may be mounted on existing towers or, if approved by the Planning Commission, on other existing structures.¶

¶

<#>Any application for use of a new or existing tower shall be accompanied by a Registered Engineer's certification of the design and safety of the tower to withstand winds of 100 miles per hour.¶

¶

<#>The tower and/or antenna may be required to be painted or screened if located on a building or structure.¶

¶

<#>The service building is aesthetically and architecturally compatible with its environment.¶

¶

<#>The service building shall be constructed of compatible materials such as wood, brick, or stucco, and shall be designed to architecturally match the exterior of residential structures within three hundred feet of the property on which it is located.¶

¶

<#>In no case will metal exteriors be allowed for service buildings.¶

¶

<#>All connecting wires from towers to accessory buildings shall be underground.¶

¶

<#>All electrical and other service wires to the facility shall be underground.¶

¶

<#>The service building shall be no larger than necessary to house the equipment and meets all setback requirements of this Ordinance.¶

Wireless Telecommunication Antenna Towers over 40 feet in height shall be subject to the Provisions of Section 8.1 in addition to the following standards:¶

¶

<#>All tower, structure locations and design approvals for towers in excess of forty (40) feet shall require a Special Use Permit subject to the provisions of Section 8.1 of this Ordinance and this section.¶

¶

<#>Standards for approval shall include the following in addition to the standards of Section 8.1.¶

¶

¶

<#>¶

¶

¶

<#>¶

¶

<#>**Personal Wireless Communications Towers and Related Facilities.** Construction of Wireless Telecommunication Ante ...

Article 7 General Provisions

Section 7.01 Essential Services (currently Section 5.8)

(A) General. Essential services authorized under any franchise from or regulated by any law or Ordinance of the State of Michigan or the Township are exempt from the application of this Ordinance.

(B) Buildings for Essential Services. Buildings that are reasonably necessary for the furnishing of adequate service by such public utilities, departments, or commissions are not essential services. The Planning Commission shall have the power to permit the erection and use of a building or an addition to an existing building, for a public service corporation or for public utility purposes, in any permitted district and permit the location in any use district of a public utility building, structure or use if the Planning Commission shall find such use, height, area, building or structure in compliance with this Ordinance and reasonably necessary for the public convenience and service. The Zoning Board of Appeals may permit a greater height or a larger area than the district requirement herein established, subject to the requirements of *Section 14.04*. Wireless Communications towers and facilities, wind energy conversion systems, and solar energy systems shall not be considered Essential Services.

Section 7.02 Performance Guarantees (currently Sections 5.9, 6.9.6.3, and 7.10.12)

(A) Performance Guarantee Authorized. In authorizing any permit, site plan, special use permit, or variance, the Township may require that a performance guarantee be furnished to insure compliance with the requirements, specifications and conditions imposed with the grant of approval and to ensure the discontinuance of a temporary use by a stipulated time.

(B) Development Agreement for Subdivision, Condominium, PUD, or Other Plan Approval.

(1) If the Township Board approves a condominium, subdivision, PUD plan, or other plan deemed necessary by the Township to have a development agreement, the Township Board shall instruct the township attorney to prepare a development agreement setting forth the conditions upon which such approval is based; such development agreement, after approval by the Township Board, shall be entered into between the township and petitioner prior to the issuance of a land use permit for any construction in accordance with the approved plan. All reasonable costs, as established by the Township Board, related to the preparation of said development agreement shall be paid by the petitioner to the Township Treasurer prior to issuance of any land use permits.

(2) As a condition of the approval of the plan by the Township, the petitioner shall furnish a cash bond or irrevocable bank letter of credit from a bank chartered in the State of Michigan in the amount of the cost plus an additional 10 percent of the cost of the proposed improvements to common land, as estimated by the Township Board, guaranteeing the completion of such improvement within a time to be set by the Township Board.

Commented [PS46]: Most Zoning Ordinances exempt essential services from regulation under the Zoning Ordinance, but required plan review for buildings. Currently, the Zoning Ordinance requires Township review of essential service buildings, but the proposed amendments change the reviewing body from the ZBA to the Planning Commission, as the ZBA should only review if variances are involved.

Deleted: Board of Appeals

Deleted: to a greater height or of larger area than the district requirements herein established,

Deleted: Board

Deleted: Personal

Deleted: Bond

Deleted: , or in granting any conditional, temporary or special approval permits

Deleted: Board of Appeals

Deleted: bond

Deleted: variance or permit

Deleted: insure

Deleted: Subdivision

Deleted: Contract

Deleted: the

Deleted: it

Deleted: contract

Deleted: contract

Deleted: condominium subdivision

Deleted: contract

Deleted: condominium subdivision

Deleted: Board

Deleted: %

Deleted: township planner

(C) Guarantee of Completion of Required Improvements. The Township Board shall require all improvements and facilities to be completed before it approves the final plat or accept the project or phase as complete.

In lieu of the actual installation of required public improvements, or soil erosion measures not covered by Part 91 of Public Act 451 of 1994, as amended, the Township Board shall require the applicant to provide a financial guarantee of performance in one or a combination of the following arrangements for those requirements which are over and beyond the requirements of the County Road Commission, County Drain Commissioner, and of any other agency responsible for the administration, operation, or maintenance of the applicable public improvement. The Township Board may waive financial guarantees of performance under this Ordinance for road lights or street trees. Unless these improvements are otherwise specified, completion shall be required prior to the issuance of occupancy permits.

(1) Performance or Surety Bond.

(a) Accrual. The bond shall accrue to the Township, covering construction, operation, and maintenance of the specific improvements.

(b) Amount. The bond shall be in an amount equal to the total estimated cost for completing construction of the specific improvements, including contingencies, as estimated by the Township Board.

(c) Term Length. The term length in which the bond is in force shall be for a period to be specified by the Township Board for the specific improvements.

(d) Bonding or Surety Company. The bond shall be with a surety company authorized to do business in the State of Michigan, acceptable to the Township Board.

(e) Escrow Agreement. The escrow agreement shall be drafted at the expense of the developer and approved by the Township Attorney.

(2) Cash Deposit, Certified Check, Negotiable Bond, or Irrevocable Bank Letter of Credit.

(a) Treasurer, Escrow Agent or Trust Company. A cash deposit, certified check, negotiable bond, or an irrevocable bank letter of credit, such surety acceptable by the Township Board, shall accrue to the Township. These deposits shall be made with the Township Treasurer, or deposited with a responsible escrow agent, or trust company, subject to the approval of the Township Board

(b) Dollar Value. The dollar value of the cash deposit, certified check, negotiable bond, or an irrevocable bank letter of credit, shall be equal to the total estimated cost of construction of the specific improvements including contingencies, as estimated by the Township Engineer and accepted by the Township Board.

Deleted: may

Deleted: , condominium plan or project plan

Deleted: Act 347 of P.A. 1972

Deleted: may permit

Deleted: ,

Deleted: road

Deleted: In case

Deleted: may

Deleted: by the Zoning Ordinance

Deleted: public

Deleted: public

Deleted: public

Deleted: public

(c) **Escrow Time.** The escrow time for the cash deposit, certified check, negotiable bond, or irrevocable bank letter of credit, shall be for a period to be specified by the Township Board.

(d) **Progressive Payment.** In the case of cash deposits or certified checks, an agreement between the Township and the developer may provide for progressive payment out of the cash deposit or reduction of the certified check, negotiable bond, or irrevocable bank letter of credit, to the extent of the cost of the completed portion(s) of the improvement, in accordance with a previously entered into agreement and acceptance of the completed portion(s) of the improvements by the Township Engineer and the Planning Director.

Deleted: sub divider

Deleted: public

(3) **Condition of Township Approval of Final Road Project, Financial Guarantees.** With respect to financial guarantees, the approval of all final road projects shall be conditioned on the accomplishment of one of the following:

(a) The construction of improvements required by this Ordinance shall have been completed by the applicant and approved by the Township Board.

(b) Surety acceptable to the Township Board shall have been filed in the form of a cash deposit, certified check, negotiable bond, irrevocable bank letter of credit or surety bond.

(4) **Inspection of Improvements under Construction.** Before approving a final project, an agreement between the applicant and the Township Board shall be made to provide for the Township Engineer and Planning Director to check and/or inspect the construction of improvements and conformity to plans.

Deleted: Public

Deleted: ing

Deleted: ing

Deleted: public

(5) **Penalty In Case Of Failure to Complete the Construction of an Improvement.** In the event the applicant shall, in any case, fail to complete such work within such period of time as required by the conditions of the guarantee for the completion of improvements, it shall be the responsibility of the Township Board to proceed to have such work completed. In order to accomplish this, the Township Board shall reimburse itself for the cost and expense thereof by appropriating the cash deposit, certified check, irrevocable bank letter of credit, or negotiable bond which the applicant may have deposited in lieu of a surety bond, or may take such steps as may be necessary to require performance by the bonding or surety company, and as included in a written agreement between the Township Board and the applicant.

Deleted: Public

Deleted: public

Section 7.03 Storage of Recreational Vehicles (currently Section 6.2.2(4))

The outdoor storage of recreational vehicles is permitted in agricultural and residential districts provided such storage does not occur within any required yard setback area (except watercraft stored in a waterfront setback). Any recreational vehicle stored outdoors must contain a valid registration from the State of Michigan to a person residing on, or having an ownership interest in, the lot or parcel upon which the vehicle is stored.

Commented [PS47]: Note: The definition of "recreational vehicle" includes boats and other watercraft.

Deleted: Storage of Trailer Units.

Section 7.04 Temporary Buildings (currently Section 6.2.3(1))

For uses incidental to construction work; such buildings shall be removed upon the completion or abandonment of the construction work or within the period of 1 year, whichever is the lesser time period. Such structures shall not be used for dwelling purposes.

Deleted: one (

Deleted:)

Deleted: unless they meet the requirements of *Section 7.105Section 7.105*

Section 7.05 Use of Structure for Temporary Dwelling (currently Section 7.2.1)

No structure shall be used for dwelling purposes that does not meet the minimum standards as defined in this Ordinance. No partial structure or other temporary structure whether of a fixed or portable construction, shall be erected or moved onto a lot and used for any dwelling purposes for any length of time.

Deleted: unless authorized by the Board of Appeals by the issuance of a temporary permit as provided for in Article V, Section 5.7.4

Section 7.06 Outdoor Storage (currently Sections 6.6.3(1) and 7.2.4)

(A) Yard Storage. Unless otherwise provided for in this Ordinance, whenever a business establishment engages in storage of supplies, merchandise, containers or any other materials outside the confines of an enclosed building structure, it shall provide an enclosure of solid fence not less than 6 feet in height around such yard storage area. The fence shall be constructed and maintained in a manner approved by the Zoning Administrator. The Zoning Administrator may permit substitution of a barrier or screen other than a fence when the same will serve the purpose of screening from vision, noise and odor.

Deleted: W

Deleted: six (

Deleted:)

(B) Prohibited Storage. No land in any of the foregoing Districts shall be used in whole or in part for the storage of unused or discarded equipment or materials, or for the storage of unlicensed cars, boats, salvage, waste and junk outside of properly authorized buildings within said Districts, except as required for the storage of usable farm machinery necessary for permitted agricultural uses and except as permitted as a Junk Yard (*Section 6.20*) or in connection with a use otherwise authorized by the Commercial District.

Section 7.07 Sanitation Requirements (currently Section 7.1.2)

No structure shall be erected, altered or moved upon a lot or premise and used in whole or in part for a dwelling, business, industrial or recreational purpose unless it meets the following requirements:

Deleted: .

(A) Compliance with all provisions of the Environmental Health Regulations for Grand Traverse County, which may be amended from time to time, and violation of any provision of that Ordinance shall constitute a violation of this Ordinance.

Deleted: shall be had

Deleted: Tri-County Health Ordinance in force in

Deleted: entitled "Sanitary Code of Minimum Standards Regulating Sewage Disposal-Water Supplies and Sanitation of Habitable Buildings in Grand Traverse, Leelanau and Benzie Counties of Michigan" as the same

Section 7.08 Supplementary Height Regulations (currently Sections 7.3.1 and 7.3.2)

(A) Permitted Exceptions. When a given use is permitted in any District, the following kinds of structural appurtenances shall be permitted to exceed the otherwise required height limitations for authorized uses, provided that they shall not be used for human occupancy:

(1) **Steeples and Similar Ornamental Architectural Features for Religious Institutions.** Steeples and similar ornamental architectural features for religious institutions that exceed the maximum height of the district, provided the height of the peak height of the steeple or ornamental architectural feature shall not be more than twice the height of the building.

(2) **Cupolas and Similar Ornamental Architectural Features.** Unless permitted in *Section 7.08(A)(1)*, cupolas and similar ornamental architectural features that are decorative in nature shall not exceed the maximum height of the district by more than 5 feet.

(3) **Other Structures.** Functional chimneys, ventilators, television aerials and ham radio antenna, provided they are no higher than necessary to achieve the intended performance of the structure.

(B) **Permitted Exceptions, Agricultural Districts.** In the agricultural district, traditional agriculture related buildings, such as barns and silos, may be constructed to heights in excess of that specified for the district, provided they are first granted a special use permit for such exception under the procedures and requirements of *Section 14.03* of this Ordinance.

Section 7.09 Developments Abutting Agricultural Land (currently Section 7.3.3 and Section 7.7)

(A) **Agricultural Setback.** The following setbacks shall be required when a planned unit development, subdivision, condominium, mobile home park, or attached single-family residential housing is developed; and on those metes and bounds parcels created after the effective date of this amendment, as provided below.

(1) A setback of 100 feet from the property line of the adjacent property shall be required for uses, buildings, or structures as follows:

(a) When a planned unit development, subdivision, condominium, mobile home park, or attached single-family residential housing is developed adjacent to land that is zoned A-1 Agriculture, and;

(b) When a planned unit development, subdivision, condominium, Mobile Home Park, or attached single-family residential housing is developed adjacent to land that is zoned Residential but is shown on the Agricultural Preserve Map of the Peninsula Township Master Plan as adopted and amended from time to time by the Planning Commission.

(2) A setback of 100 feet from the property line of the adjacent property shall be required for those portions of metes and bounds parcels created after the adoption of this amendment that have a common line with land that is zoned A-1 Agriculture unless that A-1 Agriculture zoned land is being used for residential purposes.

(3) The setback areas required by *Section 7.09(A)(1)* and *Section 7.09(A)(2)* above shall not be used for accessory uses, buildings or structures.

Deleted: Ornamental

Deleted: church steeples and cupolas

Commented [PS48]: This sub-section was split into 2 separate regulations: 1 regulating religious structures and 1 regulating non-religious structures.

Deleted: other group housing

Deleted: accessory

Deleted: other group housing

Deleted: other group housing

Deleted: Comprehensive

Commented [PS49]: This setback is proposed to be increased from 50 feet to 100 feet to be consistent with the minimum setbacks for PUDs, subdivisions, condominiums, and mobile home parks.

Deleted: 50

Deleted: (1)

Deleted: (2)

(4) A setback of 100 feet shall be required when a planned unit development, subdivision, condominium, mobile home park, or attached single-family residential housing is developed adjacent to land that is zoned Residential but is currently being used for agricultural production that includes the carrying on of usual soil practices of cultivation, spraying and fertilization.

Deleted: other group housing

(B) Lot Designation. Subdivision Lots or Condominium Limited Common Elements adjacent to such agricultural lands shall have designated building sites shown on the preliminary and final plans. Residential and accessory uses shall be located within the designated areas. Plans accompanying applications for land use permits shall show such designated sites.

Deleted: zoning

(C) Exceptions to Required Setbacks.

(1) In approving a planned unit development, subdivision, condominium, mobile home park, or attached single-family residential housing development, the Township Board may, upon recommendation of the Planning Commission, decrease the required setback on any or all lots or limited common elements when the Township Board determines that one or more of the following conditions exist:

Deleted: T

(a) The existence of topographic conditions i.e. steep slopes, changes in grade, wetlands etc. or other site conditions which make it:

(i) Unlikely that any of the uses allowed in the agricultural district would be located on the adjacent agriculturally zoned land; or

(ii) So that the properties are sufficiently separated to mitigate incompatibilities of use;

(b) There exists an easement such as a conservation easement on the land adjacent to the proposed plat that restricts agricultural uses in such a manner that protection to future homeowners is equal or better than that provided by the 100 foot setback; or.

(c) There are existing residential uses along the lot line of the agriculturally zoned property.

(D) Fencing Certain Agricultural Lands. When lands used for a planned unit development, mobile home park or attached single-family residential housing development abut agricultural lands as described in *Section 7.09*, the developer shall, prior to construction of residential units, install a control fence along the boundary between the development and the agricultural lands unless the Township Board determines that trespass problems are not likely and in that case the Board may determine that the fence is not required. The fence is intended to limit trespass onto the agricultural lands. If, at a later date, the Township Board determines that trespass is a problem, the Township Board after holding a public hearing on the issue may then require the owner or owners of the property adjacent to agricultural land to install a fence.

Deleted: other group housing

(1) Suggested minimum fencing specifications.

(a) **Mesh.** No. 11 gauge woven wire farm fence shall be 46.5 inches in height with 6.5-inch square mesh pattern (uniformly spaced).

(b) **Line Posts.** Wood line posts shall be 4.5 inches minimum diameter and 7 feet in length, spaced not more than 16.5 feet (center to center) and set 2.5 feet into the ground. All posts shall be wolmanized or treated in an equivalent manner. Wood shall be cedar, oak or approved equal.

(c) **Corner, End, Gate and Intermediate Braces Posts.** These shall be 8 feet minimum length and 8 inches minimum diameter, set 3.5 feet into the ground, spaced 10 feet from adjacent line posts, and located as shown on Plans. Intermediate braced posts shall be located a maximum of 660 feet apart on straight runs. Corner post shall be located at all changes in direction.

(2) Fencing required by this Section shall be built as approved by the Township Board.

(E) **Subdivision Lot Areas.** Individual lot areas in plats abutting certain agricultural lands described in Section 4.7.10 of the Township Subdivision Control Ordinance recorded subsequent to the date of this amendment may be less than the required minimum provided the average lot size in the recorded plat is not less than the required minimum and provided further that any reduced lot size is not less than 70 percent of the required lot area. Provision for reduced lots shall be stated on the recorded plat so that minimum average lot sizes will be maintained in the event of any subsequent amendments to the plat. No more than 20 percent of the total lots in the plat shall contain less than the required minimum lot area.

Section 7.10 Lots Existing and of Record on the Effective Date of this Ordinance (currently part of Section 7.3.4)

Any lot existing and of record on the effective date of this original Ordinance may be used for any permitted use specified for the District in which such lot is located whether or not such lot complies with the lot area and width requirements of this Ordinance, PROVIDED that all other requirements of this Ordinance are complied with.

Section 7.11 One Dwelling Unit per Lot (currently part of Section 7.3.4)

Unless explicitly permitted elsewhere in this Ordinance, not more than 1 dwelling unit shall occupy any lot except in conformance with the required lot area for each dwelling unit.

Deleted: -1/2"

Deleted: -1/2"

Deleted: 4-1/2"

Deleted: '

Deleted: 16'6"

Deleted: 2'6"

Deleted: 8'

Deleted: "

Deleted: 3'6"

Deleted: l0'

Deleted: 660'

Deleted: Act

Deleted: Seventy (

Deleted:)

Deleted: twenty (

Deleted:)

Deleted: , and PROVIDED FURTHER that not more than one (1) dwelling unit shall occupy any lot except in conformance with the required lot area for each dwelling unit

Deleted: ¶
Any lot existing and of record on the effective date of this original Ordinance may be used for any permitted use specified for the District in which such lot is located whether or not such lot complies with the lot area and width requirements of this Ordinance, PROVIDED that all other requirements of this Ordinance are complied with, and PROVIDED FURTHER that n

Deleted: one (

Deleted:)

Section 7.12 Clear Vision Area (NEW SECTION)

Fences, walls, structures, signs, trees, shrubs, and other plantings located in the clear vision triangle area described below shall not be permitted to obstruct cross-visibility between a height of 30 inches and 8 feet above the road level.

(A) Clear Vision Triangle Area. The clear vision triangle area is described as follows (see *Figure 11*):

Figure 11: Clear Vision Triangle Area

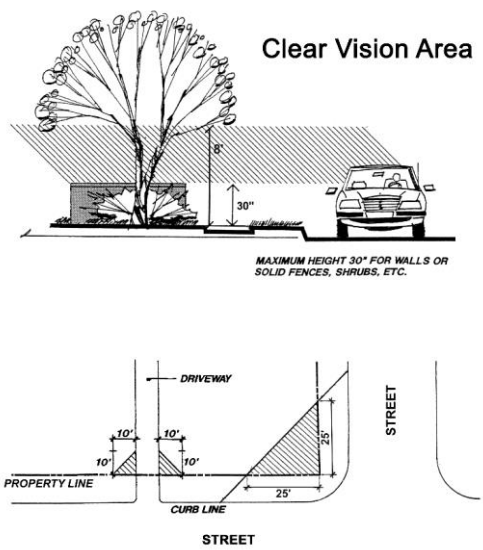

(1) Road Intersection. The area formed at the corner intersection of 2 road right-of-way lines, the 2 sides of the triangular area being 25 feet in length measured along the abutting right-of-way lines, and the 3rd side being a line connecting these 2 sides.

(2) Driveway Intersection: The area formed at the corner intersection of a right-of-way and a driveway, the 2 sides of the triangular area being 10 feet in length measured along the right-of-way line and edge of the driveway, and the 3rd side being a line connecting these 2 sides.

(B) Trees. Trees may be permitted in the clear vision triangle area provided that limbs and foliage are trimmed so that they are not less than 8 feet above the road level.

(C) Shrubs. Shrubs may be permitted in the clear vision triangle area provided that they are trimmed so that they are not more than 30 inches above the road level.

(D) Landscaping. All landscaping, except turf grass or ground cover, shall not be located closer than 3 feet from the edge of any driveway or road within a clear vision triangle area.

(E) Right-of-Way Line. Where there is a difference between the existing road right-of-way line and the proposed road right-of-way line, the clear vision triangle shall be measured from the proposed road right-of-way line.

Section 7.13 Accessory Buildings and Structures (currently Section 6.2.2(2)(a))

A land use permit must be issued prior to the erection of an accessory building or structure. Applications for accessory buildings and structures shall be administered and reviewed as part of the original or proposed revised plot plan or site plan, depending upon the nature of the principal use of the lot. Accessory uses, buildings and structures shall be subject to the following regulations except as otherwise permitted in this Ordinance.

(A) Attached Accessory Buildings and Structures. An attached accessory building or structure, including carports which are attached to the principal building, shall comply in all respects with the requirements of this Ordinance applicable to the principal building. Unless an accessory building is attached directly to the principal building or connected to it via habitable floor area or shared wall construction, the accessory building shall be classified as a detached structure.

(B) Detached Accessory Buildings. Detached accessory buildings shall comply with the following requirements:

(1) Located on Same Lot as Principal Building. A detached accessory building shall be located on the same lot as the principal or main building, except for agricultural buildings located on a farm. In a case where an owner owns a shoreline lot and an upland lot across the road, the detached accessory building shall be located on the same lot as the principal building. In a case where an owner owns 2 or more contiguous lots, the owner may combine the lots into 1 undivided lot so that the detached accessory building is be located on the same lot as the principal building.

(2) Separation Distance of Detached Accessory Buildings. An accessory building, unless attached and made structurally a part of the principal building, shall not be closer than 10 feet to the principal building or any other building on the lot.

(3) Placement. Except as provided elsewhere in this Ordinance, detached accessory buildings are subject to all yard setback requirements of the district in which it is located.

(4) Lot Coverage. Provided that the total lot coverage of the lot adheres to the requirements of the respective zoning district, the maximum allowable lot coverage of each detached accessory buildings (excluding agricultural buildings located on a farm) shall not exceed the ground floor area of the principal building, excluding the area of any attached accessory buildings to the principal building (e.g., excluding attached garage area).

(5) Height. Accessory buildings shall be subject to the height standards of the underlying zoning district. With the exception of agricultural buildings located on a farm, accessory buildings shall not be greater than 2 stories and the second story shall be unfinished and used for storage only.

(C) Not Permitted Prior to a Principal Structure. Accessory buildings shall not be erected on a lot or parcel in any district prior to the establishment of a principal structure, except for agricultural buildings on a farm.

Deleted: ¶

Deleted: Accessory buildings such as farm buildings and a detached garage for the storage of automobiles shall be permitted with a single-family dwelling; provided, however, that the farm buildings and garage shall comply with the setback restrictions and side yard requirements.

Commented [PS50]: On 11/10/99, the ZBA ruled that garages cannot be detached from shoreline parcels.

Commented [PS51]: A 10-foot separation distance is common in many Zoning Ordinances and allows for air, light, and emergency access.

Commented [PS52]: In cases considered on 1/12/95 and 5/13/99, the ZBA cited the County Construction Code which stated that a noncommercial garage was a building that held 4 passenger cars or less. Since the area allowing 4 passenger cars can be subjective, we recommend simply limiting the area to the ground floor area of the principal building so that the detached garage is not larger than the house.

(D) Used by Site Occupant. Accessory buildings and accessory portions of the principal building shall be used solely for the use of the occupant of the principal building to which it is accessory.

Commented [PS53]: On 1/12/95 and 11/10/99, the ZBA ruled that the use of an accessory building was limited to the occupant of the principal building.

Section 7.14 Fences and Walls (currently Section 7.13)

(A) Intent. The intent of this section is to allow fences and walls that: (a) are not erected which would block views; (b) do not obstruct access by emergency personnel; (c) are not within the road right-of-way; (d) are not below the flood elevation line; and (e) are not closer than 3 feet of adjacent property without the agreement of the neighboring owner.

Deleted: with a height of four (4) feet or less within required yards (setbacks) with restrictions so that fences

Deleted: d

Deleted: three (

Deleted:)

(B) Excluded Fences. The following fences shall not be regulated by this section:

(1) Agricultural Fences. Agricultural fences that are used for general farming and horticultural uses, field crop and fruit farming, raising and keeping of small animals, and raising and keeping of livestock.

(2) Temporary Fences. Temporary fence such as snow fences placed during the winter to control drifting snow or safety fences during construction.

(3) Low Decorative Fences. A Decorative Fence no greater than 18 inches in height and/or 4 inches in width and is not a barrier.

Deleted: eighteen (

Deleted:)

Deleted: four (

Deleted:)

(C) Retaining Walls. The Zoning Administrator may issue a land use permit for a retaining wall that meets all of the wall requirements of this section, provided the retaining wall is necessary to protect or prevent structures on the premises from erosion damage. The Township Engineer may be consulted to determine whether a retaining wall is necessary and whether it is structurally sufficient.

(D) Clear Vision Triangle Area. No fence or wall shall be erected, established or maintained within the clear vision triangle area of any lot except in compliance with *Section 7.12*.

(E) Front Yard and Waterfront Location. Unless otherwise provided in this Ordinance, no fence shall be constructed between the main building and any road or between the main building and the waterfront unless that fence is 4 feet in height or less measured from final grade below the fence, is at least 50 percent open when viewed from the perpendicular, and is no wider than 2 feet at any point. If located within a front yard setback or waterfront setback, the fence shall be decorative in nature (e.g., wrought iron, picket, and split rail). Decorative fencing does not include chain link fencing. This sub-section shall not apply to seawalls, which are regulated under *Section 3.13(G)(5)*, or retaining walls, which are regulated under *Section 7.14(C)*.

Deleted: ; N

Deleted: within a required yard

Deleted: setback

Deleted: four (

Deleted:)

Deleted: with a width no greater

Deleted: two (

Deleted:)

(F) Maximum Height. Unless otherwise provided in this Ordinance, no fence or wall constructed outside of a front yard or waterfront yard shall exceed 6 feet in height measured from the final grade below the fence or wall.

(G) Obstructions. No fence or wall shall obstruct access by emergency personnel. A gate at least 3 feet in width shall be provided for access by emergency personnel to all parts of the property and as such shall not be considered an obstruction.

Deleted: three (

Deleted:)

(H) Required Setbacks.

(1) Shoreline. No fence or wall shall be constructed closer to the shoreline of Grand Traverse Bay than the flood elevation line, unless it is a seawall is approved under *Section 3.13(G)(5)*.

(2) Road Right-of-Way Prohibited. No fence or wall shall be placed within a road right-of-way.

(3) Road, Street, or Alley. No fence or wall shall be placed closer than 20 feet from the driving lane of a road, street or alley.

Deleted: twenty (

Deleted:)

(4) Adjacent Property. No fence or wall shall be placed closer than 3 feet to an adjacent property line without both owners providing approval in writing to the Zoning Administrator and such approval shall include a statement that the fence shall be maintained in good condition and such maintenance shall be the responsibility of the owner of property upon which the fence is constructed. The approval between the owners shall be in the form of a recordable agreement, which shall be recorded with the Grand Traverse County Register of Deeds after approval by the Zoning Administrator. A copy of the recorded agreement shall be submitted to the Township prior to the issuance of the fence permit.

Deleted: three (

Deleted:)

Deleted: each

Deleted: property

(I) Construction. Fences shall be designed so as not to impede the natural or established water drainage along lot lines.

(J) Maintenance. Walls and fences shall be maintained in good condition by the owner and shall not constitute an unreasonable hazard. Rotten, crumbled, or broken compounds shall be replaced, repaired, or removed.

(K) Orientation of Finished Side. Where a fence or wall has a single finished or decorative side, it shall be oriented to face outward toward adjacent parcels or road rights-of-way (i.e., away from the interior of the lot to which the fence or wall is associated).

(L) Prohibited Materials. All fences or walls hereafter erected shall be of a decorative nature or chain linked unless otherwise prohibited. Barbed wire, spikes, nails or any other sharp instrument of any kind are prohibited on top of or on the sides of any fence, provided that barbed wire cradler may be placed on top of fences enclosing public utility buildings or equipment in any district.

Section 7.15 Swimming Pools (NEW SECTION)

All private swimming pools erected in the Township shall comply with the following provisions:

(A) Permit Required. A building permit shall be obtained for alteration, erection and construction of permanent above and below ground swimming pools and for portable pools with a

diameter exceeding 12 feet or an area exceeding 100 square feet. The application for such permit shall include the name of the owner, the manner of supervision of the pool and a site plan showing the dimensions and location of the pool and nearby buildings, fences, gates, septic tanks, tile fields, public utilities and easements. The application for such permit for a below ground pool shall be accompanied by plans and specifications to scale of the pool walls, slope, bottom, walkway, diving boards, type and rating of auxiliary equipment, piping and valve layout. Any other information affecting construction and safely features deemed necessary by the Township or the County Health Department shall also be submitted.

(B) Easements and Rights-of-Way. No portion of the swimming pool or associated structures shall encroach upon any easement or right-of-way which has been granted for public utility use.

(C) Minimum Setbacks. Setbacks shall comply with required setbacks specified by the applicable zoning district. A pool fence shall not be built within the front yard or side yard setbacks. Rear or side yard setback shall be not less than 10 feet between the pool wall and/or structure and the side or rear property line or less than 4 feet between pool wall and any building on the lot.

(D) Required Barrier. For the protection of the general public, all swimming pools shall be completely enclosed by a chain link fence or a fence of comparable safety not less than 4 feet nor more than 6 feet in height, set at a distance of not less than 4 feet from the outside perimeter of the pool wall provided; however, that fencing shall not be required in the following 2 circumstances:

(1) To the extent that there is no public access to the lot or enclosure is accomplished by a building 4 feet or more in height having no means of public access; or

(2) If a swimming pool is above grade and has exterior side walls with a smooth surface not less than 4 feet in height where all means of access are secured, raised and/or locked to prevent unauthorized use.

All openings in an enclosing fence or building shall be equipped with a tamper proof lock when the pool is not in use. If the entire premises upon which a swimming pool is located are enclosed by fence or wall, the Zoning Administrator, after inspection and approval thereof, may determine that a fence is not required.

(E) Code Compliance. Notwithstanding the requirements of this section, all private swimming pools shall comply with all applicable federal, state, county, and local codes and ordinances. Where the requirements of this Ordinance exceed the requirements of any other code or ordinance, the requirements of this Ordinance shall prevail.

Section 7.16 Accessory Solar Energy (NEW SECTION)

(A) Solar Energy Systems.

(1) Purpose. It is the purpose of this sub-section to promote the safe, effective, and efficient use of solar energy systems to generate electricity. Further, it is the purpose of this sub-

section to standardize and streamline the review and permitting process for solar energy systems.

(2) **Roof-Mounted Solar Energy Systems:** Roof--mounted solar energy systems for the on-site use are permitted accessory structures in all zoning districts, subject to the following regulations:

(a) **Height.** Roof-mounted systems shall not extend more than 3 feet above the roofline.

(b) **Location.** Roof-mounted solar energy systems may be located anywhere on a roof, but shall not protrude beyond the edge of the roof.

(3) **Ground-Mounted Solar Energy Systems (10 kW or less).** Ground mounted and freestanding solar energy systems of 10kW or less for the on-site use are permitted accessory structures in all zoning districts, subject to the following regulations:

(a) **Location and Setbacks.** Solar energy systems shall be located to the side or rear of the principal building. Solar energy systems shall also meet the minimum setbacks of the zoning district.

(b) **Height.** The height of the solar energy system and any mounts shall not exceed 10 feet when oriented at maximum tilt.

(c) **Screening.** Landscaping shall be provided to screen the racking (i.e., the framing below the panels) from view on all sides.

(d) **Area.** Ground-mounted solar energy systems shall be subject to the maximum lot coverage standards of the zoning district.

(4) **Ground-Mounted Solar Energy Facilities (over 10 kW).** Ground mounted and freestanding solar energy systems over 10 kW capacity are permitted subject to special land use approval in the A-1 zoning district, and subject to the following regulations:

(a) **Location and Setbacks.** The solar energy system shall not be located closer to the street than any portion of the principal building, and shall meet the minimum front, side and rear yard setbacks of the zoning district.

(b) **Height.** The height of the solar energy system and any mounts shall not exceed fifteen (15) feet when oriented at maximum tilt.

(c) **Screening.** Landscaping shall be provided to screen the racking (i.e., the framing below the panels) from view on all sides.

(d) **Area.** Ground-mounted solar energy systems shall be subject to the maximum lot coverage standards of the zoning district.

(5) **General Standards.** The following requirements are applicable to all roof-mounted or ground-mounted solar energy systems.

Commented [PS54]: The definition of "lot coverage" states that lot coverage is measured from the drip edge of a roof or to the wall if there is no roof. As defined, the lot coverage of the panel would be the area covered as the panel is tilted.

Commented [PS55]: The provisions for Ground Mounted Solar Energy Systems over 10 kW will allow for larger systems in the A-1 district, such as at Chateau Chantal.

Commented [PS56]: A maximum height of 15 feet is typical for larger scale solar energy facilities.

(a) **Building Permit.** A building permit shall be required for any roof-mounted or ground-mounted solar energy system.

(b) **Batteries.** When solar storage batteries are included as part of the solar collector system, they must be placed in a secure container or enclosure when in use, and when no longer used shall be disposed of in accordance with applicable laws and regulations.

(c) **Removal.** If a solar energy system ceases to perform its intended function (generating electricity) for more than 12 consecutive months, the operator shall remove the collectors, mounts, and associated equipment and facilities no later than 90 days after the end of the 12-month period. Where the removal has not been lawfully completed as required above, and after at least 30 days written notice, the Township may remove or secure the removal of the solar energy system or portion thereof, with the Township's actual cost and reasonable administrative charges to be placed as a lien on the property. A lien on the property shall be superior to all other liens except taxes.

Article 8 Environmental Performance Standards

Section 8.01 Wetland Restrictions (currently part of Section 6.9.3.7)

(A) Development or Modification Within a Wetland. There shall be no development or modification of any kind within a wetland area without there first having been issued a wetlands permit by the Michigan Department of Environmental Quality and/or an Earth Change Permit from Grand Traverse County as appropriate. Lands subject to high organic content soils, high water table, flooding or otherwise deemed by the Planning Commission or Zoning Administrator to be uninhabitable shall not be used for residential purposes, or for uses that may, in the judgment of the applicable Federal, State, County, Local, or Township agency, increase the danger to health, life, or property or increase the flood hazard. Such land shall be set aside for other uses, such as parks or other open space.

(B) Minimum Wetland Setback. A minimum setback of 25 feet shall be maintained between any structure or impervious surface and a wetland. However, docks, patios, terraces, decks, pathways, and similar structures may be permitted within the wetland setback, subject to review and approval by the Township upon finding there will be no adverse impact on ground or surface waters of the wetland. The Zoning Administrator or Planning Commission, as applicable, may require the applicant to obtain a formal determination of the wetland boundary by the Michigan Department of Environmental Quality.

Deleted: or floodplain

Deleted: Natural Resources

Deleted: Planning Commission

Deleted: within a condominium subdivision

Commented [PS57]: Chapter 4 of the Master Plan recommends a Environmentally Sensitive Area Overlay that includes a minimum setback for wetlands. While such an overlay would be difficult to craft at this time, we recommend adding a minimum wetland setback. Please note that while the MDEQ regulates activity in a wetland, it does not require or enforce setbacks from a wetland. Therefore, any wetland setbacks are locally adopted and enforced.

Section 8.02 Floodplain Controls and Restrictions (currently Section 7.4.7 and part of Section 6.9.3.7)

(A) Intent and Purposes. The purpose of these regulations is to protect those areas of the Township which are subject to flooding in the flood plain of the Great Lakes. All land included in the flood plain shall be subject to the requirements specified herein, in addition to the normal zoning district requirements in which said land is located.

(B) Flood Plain Area Identification. Flood plain shall be those areas falling below elevation 582.8 I.G.L.D. (elevation 582.8 - 1955 I.G.L.D. equals elevation 583.5 1985 I.G.L.D. or elevation 584 USGS), which may be updated by the Federal Government. Such flood areas shall be restricted as to use, building encroachment, and occupancy, so that human life is protected and future flood damage is minimized. In the event of reasonable doubt as to the location of a flood plain, the Zoning Administrator may require the applicant to submit detailed engineering studies prepared by a registered professional engineer showing the extent and location of floodable areas.

(C) Permitted Uses. Not withstanding any other provisions of this Ordinance (including *Section 3.13*), no uses shall be permitted to occur within a flood plain except the following:

Deleted: predictable

Commented [PS58]: This is a cross-reference to the Shoreline Overlay District

(1) Uses, such as farms, truck gardens, nurseries, parks, open space, playgrounds, preserves, bridle paths, or other similar uses.

(2) Yard and setback areas or other open space portions required for any District, provided that the elevation of the lowest floor designed for human habitation shall be at least 3 feet above the established flood plain.

(3) Off-street parking uses, provided that all parking areas shall conform to the provisions of *Article 9*.

(4) Roads, service drives, utility uses, when designed so as not to increase the possibility of flood or be otherwise detrimental to the public health, safety, and welfare.

(D) Restricted Uses. Any structure where human habitation is contemplated either as a place of residence, places of public gathering or employment, or for uses that may in the judgment of the Planning Commission increase the danger to health, life, or property or increase the flood hazard shall be prohibited from locating in flood plain areas.

(E) Required Conditions. Any construction within the flood plain shall conform to the requirement of *Section 3.13* of this Ordinance, and permits for such construction shall not be issued unless they receive review and approval by the Planning Commission.

(1) Any construction within the flood plain shall be so fixed to the site as to withstand the force of the expected velocity of flood water. The Planning Commission may require professional engineering review of any such construction.

(2) Where topographic data, engineering studies, or other studies are needed to determine the effects of flooding or flow of water, the applicant shall submit such data or studies, prepared by a registered professional engineer, to the Planning Commission.

(3) Filling in flood plain areas to raise lands above the flood plain may be permitted with the approval of the Planning Commission subject to prior approval of the Michigan Department of Environmental Quality and Public Act 451 of 1994, as amended, and an Earth Change Permit from Grand Traverse County as appropriate..

Section 8.03 Removal of Fruit-Producing Trees, Vines, or Shrubs from Properties Being Developed (currently Section 7.8 and part of Section 6.9.3.8)

Because of the unique character of Peninsula Township as a commercial fruit-producing area where the livelihood and well-being of many area residents depends on the successful production of fruit crops, it is necessary to control dangerous insects and infectious plant diseases which constitute a menace to such fruit crops. Since neglected, abandoned, or semi-abandoned fruit-producing plants often harbor such insects, pests and plant diseases, the owner of properties being developed for planned unit developments, mobile home parks, site condominiums, subdivisions, or other housing developments shall remove and destroy all existing fruit-producing trees, vines, or shrubs from the subject properties. The removal of all such plants shall occur prior to project approval and commencement of construction

Deleted: three (

Deleted:)

Deleted: Section 7.6

Commented [PS59]: This is a cross-reference to the Shoreline Overlay District

Deleted: Section 7.4

Deleted: Article

Commented [PS60]: The Planning Commission is the more appropriate body to review plans for construction in a floodplain. However, if the construction is in a setback, the ZBA will also have to review the plan pursuant to its variance standards.

Deleted: Board of Appeals

Deleted: Board of Appeals

Deleted: Board of Appeals

Deleted: Board of Appeals

Deleted: Natural Resources

Deleted: 245

Deleted: Public Act 1929

Deleted: group

Deleted: plants

Deleted: the

unless it can be clearly demonstrated that the plants will remain in production and be maintained and treated on a regular basis by a pesticide applicator licensed by the Michigan Department of Agriculture.

Section 8.04 Soil Erosion and Sedimentation Control and Protection of Steep Slopes (currently Section 6.9.3.9)

In the event that any person shall intend to make changes in the contour of any land proposed to be developed, or changed in use by grading, excavating or the removal or destruction of the natural topsoil, trees, or other vegetative covering thereon, the same shall only be accomplished after the owner of said land or his agent has submitted to the Zoning Administrator or Planning Commission, as applicable, for approval a plan for erosion and sedimentation controls, unless there has been a prior or current determination by the Zoning Administrator or Planning Commission that such plans are not necessary. Such plans shall contain adequate measures for control of erosion and siltation and a Soil Erosion and Sedimentation Control permit may be required. Where development is proposed on or near a slope greater than 9 percent, the Zoning Administrator or Planning Commission may require that the plan be reviewed by the Township Engineer to determine the development's impact on the slope prior to approval of a site plan or land use permit. For residential developments, the guidelines and policies contained in Section 5.4.12 PLANS REQUIRED FOR THE CONTROL OF EROSION AND SEDIMENTATION: of the Peninsula Township Subdivision Control Ordinance No. 8 shall be used. Minor activities, such as normal gardening activities in compliance with this Ordinance, do not require a Soil Erosion and Sedimentation Control permit.

Section 8.05 Mining or Removal of Topsoil, Sand, Gravel, and Minerals (currently Section 7.2.3)

(A) No topsoil shall be removed for purposes of resale nor shall any open pit mining for the purposes of extracting sand, gravel or minerals be permitted unless conducted in the A-1 zone and at least 200 feet from any public highway and at least 50 feet of any side or rear lot lines of any lot adjoining land zoned for residential uses.

(B) All mines shall have a site rehabilitation plan approved by the Township. The rehabilitation plan shall include a plan for planting trees in a manner that will create a woodland over the long term, which will assist in slope stabilization.

(C) The Planning Commission may establish routes for truck movement in and out of the mine in order to minimize the wear on public roads, to minimize traffic hazards, and to prevent encroachment of traffic, or the by-products of traffic (such as dust and noise), upon adjacent properties.

(D) All permitted mines shall be maintained in a neat, orderly condition so as to prevent injury to any single property or individual, or to the community in general. When an open pit mine or gravel pit has ceased to be worked regularly, any "attractive nuisance" features such as steep banks or deep holes that could be a hazard to the safety of children shall be promptly rough graded so as to remove such hazard or hazards. All areas within any mine shall be rehabilitated progressively as they are worked out or abandoned so that they shall be in a condition of being entirely lacking in hazards, inconspicuous, and blended with the general surrounding ground form. When an open pit mine or gravel pit has ceased to be worked regularly for a period of 3 years, it shall be rough graded in such a manner as to restore the

Commented [PS61]: The Planning Commission previously asked how this applies to converting property to agricultural use or for minor development. Where there are references to local standards, these types of uses will have to be reviewed by the Zoning Administrator and Township Engineer, if applicable, on a case by case basis.

Deleted: developer

Commented [PS62]: According to the MDEQ, slopes of 7-12% are a moderate erosion hazard and slopes of over 12% are a high erosion hazard. We recommend classifying the upper half of the 7-12% slopes as "steep slopes." Also, the Waterfront Sub-District area of the Shoreline Overlay District ends at 60 feet from the OHWM or where the slope is greater than 9%, whichever is the greater distance. Therefore, classifying steep slopes at 9% or greater will make them consistent with the Waterfront Overlay District.

Deleted: where necessary, using

Deleted: 13

Deleted: within

Deleted: of

Deleted: nor within

Commented [PS63]: We recommend deleting the reference to the ZBA. If the applicant wants to conduct mining in a setback, they can apply for a variance by meeting the standards.

Deleted: , unless the removal within said restricted areas in this zone shall have been first approved by the Board of Appeals

Deleted: three

land to contours harmonious with those of the surrounding terrain, protected from erosion and vegetative cover established.

Section 8.06 Storm Water Management (currently Section 7.2.5)

(A) **General Applicability.** When any land in the Township is developed or altered in any way which affects storm water runoff, the owner shall develop and submit for approval a plan detaining any storm water runoff onto adjacent properties including roads and other rights of way pursuant to the Peninsula Township Storm Water Control Ordinance (Ordinance #33, as amended). Such detention shall follow accepted storm water detention practices and the maximum amount of storm water runoff allowed shall not exceed that which existed prior to the development or improvement of the property.

Deleted: to the Zoning Administrator

Deleted: by the Township

Deleted: .¶
<#>¶
T

(B) **Residential Structures.** In the event that the Peninsula Township Storm Water Control Ordinance is not applicable to residential structures, the following storm water management standards shall apply:

(1) **Residential Structures Subject to Major Storm Water Review.** For Major Storm Water Review, the Township Engineer shall review and approve the storm water management plan prior to the issuance of a Land Use Permit. The cost of the Township Engineer's review and inspections shall be paid by the applicant. Residential structures subject to Major Storm Water Review shall include the following:

(a) Residential structures within 500 feet of the ordinary high water mark (OHWM) and where the impervious surface coverage of the structure is equal to or greater than 3,500 square feet;

(b) Residential structures that will disturb more than 1 acre of land; or

(c) Any residential structure that, in the opinion of the Zoning Administrator, requires review by the Township Engineer based on complexity of the disturbance of natural features or site development.

(2) **Residential Structures Subject to Minor Storm Water Review.** For Minor Storm Water Review, the Zoning Administrator shall review and approve the storm water management plan prior to the issuance of a Land Use Permit. Residential structures subject to Minor Storm Water Review shall include residential structures with an impervious surface coverage of less than 3,500 square feet and occurring on a lot that is subject to a setback from the ordinary high water mark (OHWM).

(3) **Required Storm Water Management Volume.** The required detention of a storm water system subject to Minor or Major Storm Water Review shall be the first 1/2 inch of storm water runoff from all existing and proposed impervious surfaces. For example purposes only, if a subject lot has an impervious surface coverage of 1,000 square feet and is adding 200 square feet of impervious surface, the site must have a storm water management system that can detain at least 50 cubic feet of storm water (i.e., 1,200 sq. ft. / 24) and allow the storm water to naturally permeate into the soil. However, the approving authority may require a more voluminous storm water management system if the

proposed land use, slope, or underlying soil types are expected to increase the rate of runoff discharge from the lot.

(4) **Design and Installation.** The storm water management system shall include 1 or more of the Best Management Practices (BMPs) published by the Michigan Department of Environmental Quality (MDEQ) or any other BMP accepted by the approving authority, such as underground infiltration trenches, rain gardens, and rain barrels. A vegetated yard area may be used when, in the opinion of the approving authority, the slope and underlying soil conditions will allow for rapid infiltration. The storm water management system shall be installed in accordance with the approved design.

(5) **Maintenance.** All storm water management systems shall be properly maintained so as to comply with the requirements of this Section. Each application for Minor or Major Storm Water Review shall include a maintenance agreement to be reviewed and approved by the approving authority.

Section 8.07 Exterior Lighting (currently Section 7.14)

(A) Applicability.

(1) All new outdoor light fixtures and specified lighting practices shall conform with this section.

(2) Outdoor lighting fixtures existing as of the effective date of this amendment may continue to be used except as otherwise provided.

(3) Voluntary compliance with the intent of this section for exempt uses or structures and existing outdoor fixtures is encouraged.

(B) Intent. The Peninsula Township Board finds that this Section of the Ordinance complies with the Master Plan and that the dark night sky is considered a valuable natural and aesthetic resource which should be protected. The dark night sky contributes significantly to our quality of life by contributing to the public peace and to the health, safety, and welfare of the residents of and visitors to Peninsula Township. The essential public purposes that warrant Township regulation of the use of outdoor light fixtures include, but are not necessarily limited to:

(1) Safety of individuals using outdoor areas for legitimate and necessary purposes after dark.

(2) Minimization of light pollution, which has a detrimental effect on the environment, astronomical research, amateur astronomy, and general enjoyment of the night sky.

(3) Elimination of unnecessary and/or unwanted illumination of adjacent and distant properties.

(4) Conservation of electrical energy-generating resources.

(5) Protection of vehicular and pedestrian traffic from dangerous glare.

(C) Lighting-Related Definitions.

(1) Automatic Timing Device. A device which automatically turns outdoor light fixtures and/or circuits on and off.

(2) Floodlight. A very strong artificial light so directed or diffused as to give a comparatively uniform illumination over a rather large area and often used to light up the outside of buildings.

(3) Full Shielding. A technique or method of construction which causes light emitted from an outdoor light fixture or any bright reflecting section to be such that the light source and any bright reflecting surface is not visible above the shield horizontal plane or beyond the boundaries of the property.

(4) Glare. Intense blinding light emanating directly from a lamp, reflector or lens including bright reflective sections.

(5) Light Pollution. Artificial light which causes a detrimental effect on the environment, astronomical observation, enjoyment of the naturally-illuminated night sky or causes undesirable glare or unnecessary and/or unwanted illumination of adjacent or even distant properties.

(6) Light Source. The bulb or other element in an outdoor light fixture which emits light.

(7) Motion Detector. A device triggered by motion and used to energize light sources.

(8) Outdoor Light Fixture. An illuminating device which is permanently installed outdoors, including but not limited to devices used to illuminate signs.

(9) Shield. In general, a permanently-installed, opaque shade, cowl, hood, baffle, or other construction which limits, restricts, or directs light, or the visibility of a light source, to meet the standards of this Section.

Deleted: non-translucent

(10) Security Lighting. Such outdoor light fixtures and/or practices intended to discourage intrusion on the premises by unwanted persons.

(11) Vehicle Use Area. A Vehicle Use Area is a paved or unpaved driveway, maneuvering, loading and delivery area, solid waste collection, temporary storage area and outdoor processing area.

(12) Yard Lighting. Such outdoor light fixtures and/or practices intended for the convenience, enjoyment, and safety of a property owner.

(D) Exterior Lighting Standards.

(1) New Light Fixtures. All new outdoor light fixtures shall meeting the following requirements:

(a) All new outdoor light fixtures shall have full shielding, unless otherwise permitted. Full cut-off fixtures shall be used to prevent light from projecting above a 90-degree horizontal plane. Additionally, the light trespass from a property shall not exceed 0.5 foot candles at the property line, measured 5 feet from the ground (see *Figure 12*, below).

Figure 12. Light Fixture Shielding and Light Trespass

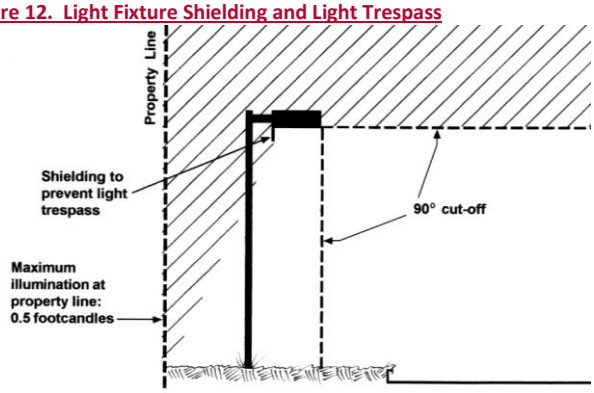

(b) Driveway post lights shall have translucent lens or covers to protect vehicular and pedestrian traffic from glare.

(c) Control light fixtures with manual switches, motion detection devices or other automatic timing devices.

(2) Building Facades. Building facades may be lit, but only in a downward direction and fully shielded.

(3) Security Lighting. Security lighting may be approved as part of a site plan, and if approved shall be fully shielded.

(4) Prohibited Lighting Types and/or Practices.

(a) Searchlights, lasers, or other high-intensity lights designed or used primarily to light the sky for advertising or entertainment purposes;

(b) Broad-spectrum lighting, such as quartz, metal halide and mercury vapor lighting because of the diffusive and reflective characteristics of such light;

(c) Foliage/tree "up lighting".

(5) Illuminated Signs. Illuminated signs shall comply with *Section 11.10*.

Deleted: H

Commented [PS64]: A 90-degree cutoff and light trespass limit of 0.5 foot candles at the property line measured 5 feet from the ground is a fairly common lighting standards. However, if the Township prefers a different standard, we can easily change the text and graphic.

Commented [PS65]: The deleted text of this sub-section will be inserted into the sign illumination standards of Section 11.110.

Deleted: ¶

<#>Illuminated signs must be turned off no more than one (1) hour after the close of business and may be turned on no earlier than one (1) hour before the opening of business except by special permission granted as a condition of site plan approval.¶

¶

<#>External illumination of signs, billboards, advertising kiosks, and information boards shall be mounted at the top of the sign or sign structure and be fully shielded;¶

¶

<#>Internally illuminated signs, billboards, advertising kiosks, and information boards shall have a dark background with lighter-colored translucent (not transparent) lettering, logos, and/or designs.¶

(6) Parking Lots. Parking Lots for commercial uses, planned unit developments, condominium subdivisions, subdivisions, public and institutional buildings, schools; other institutional uses, parks, processing facilities, retail sales uses and other vehicular use areas;

(a) Parking lots shall be illuminated no earlier than 1 hour before regular hours of operation, and no more than 1 hour after regular hours of operation except by special permission granted as a condition of site plan approval.

(b) Pole height shall not exceed 15 feet except a pole height of up to 25 feet may be allowed for loading areas where necessary for agricultural purposes.

(c) A greater number of low mounted lights are favored over elevated lights.

(E) Exemptions. The following uses and activities shall be exempt from the Exterior Lighting Regulations:

(1) Emergency equipment while in use.

(2) Holiday decorations, provided that decorative exterior lighting shall not be active for more than 90 days in a calendar year and shall not include searchlights, stroboscopic lights, or other lights that would cause a nuisance.

(3) Fixtures such as decorative or porch lights or walkway lighting.

(4) All outdoor light fixtures producing light directly from solar or the combustion of fossil fuels such as kerosene lanterns or gas lamps provided the intensity of light does not create glare or distractions that pose a potential danger to vehicular or pedestrian traffic or unnecessary and unwanted glare in the night sky.

(5) Lighting fixtures to illuminate the American flag may have light shining vertically provided the light source is shielded and the light is focused on the flag in accordance with the United States Flag Code.

(F) Relief from Exterior Lighting Regulations. Applications for relief from the regulations of this Section may be made to the Peninsula Township Zoning Board of Appeals pursuant to *Section 14.04* provisions and standards for variances. Any ruling granting relief shall contain all conditions upon which said permit has been granted, including but not limited to the effective dates, times, locations and specifications of the lighting fixtures and plans permitted.

Deleted: churches

Deleted: one (

Deleted:)

Deleted: one (

Deleted:)

Commented [PS66]: The deleted text for "Application/Review Procedures for Special Use Permits and Platted Subdivisions" will be inserted in Section 14.102(B), which will list all of the information required on a site plan.

Deleted: <#>**Application/Review Procedures for Special Use Permits and Platted Subdivisions.** The application for all Special Use Permits and subdivisions after the effective date of this amendment shall include the following information:¶

¶

<#>Description of all illuminating devices, fixtures, lamps, supports, and reflectors, shall include catalog cuts, manufacturer's illustration and the like.¶

¶

<#>Photometric data shall be superimposed on the site plan. For smaller projects, the applicant may provide photometric data supplied by the manufacturer which is separate from the site plan.¶

¶

<#>Such other information about the site or adjoining sites as may be essential for the Township Board to determine if the requirements of this section are being met.¶

¶

Deleted: or

Deleted: Section 5.7

Article 9 Parking, Loading, Access Management, and Private Roads

Section 9.01 General Off-Street Parking and Loading Regulations (currently Section 6.10, Section 7.6.1, and Section 7.6.2)

(A) Intent and Purposes (currently Section 6.10.1). This article is intended to restrict the use of areas set aside for parking purposes as part of an on-site, adjacent, or nearby land use.

(B) Requirements. There shall be provided in all Districts, at the time of erection or enlargement of any main building or structure or change in land use, automobile off-street parking space with adequate access to all spaces. The proper number of parking spaces for any given use as specified in this Section are based upon considerations of the maximum number of motor vehicles that can be expected on the premises at the same time during an average day.

(1) Location of Residential Off-Street Parking. Parking spaces for residential uses may be within any yard area, but shall not be permitted within a minimum front yard setback unless otherwise provided in this Ordinance. Required residential off-street parking spaces shall consist of parking strip, parking bay, driveway, garage, or combination thereof and shall be located on the premises they are intended to serve.

(2) Location of Off-Street Parking for Other than Residential Use. Parking spaces for non-residential uses shall be either on the same lot or within 300 feet of the building it is intended to serve, measured from the nearest point of the building to the nearest point of the off-street parking lot. Ownership shall be shown on all lots or parcels intended for use as parking by the applicant.

(3) Joint Use of Off-Street Parking Areas. Joint use of off-street parking may be provided collectively by 2 or more buildings or uses provided the total number of parking spaces shall not be less than the sum of the requirements of the space requirements computed separately in accordance with *Section 9.02*. In the instance of dual function of off-street parking spaces where the owners can demonstrate that operating hours or parking needs of individual building or uses occur at distinctly different times, the Planning Commission may grant an exception in accordance with the following:

(a) Number of Required Spaces. In determining whether to allow fewer parking spaces in a shared parking lot, the Planning Commission shall consult the most recent edition of the *Parking Generation*, published by the Institute of Traffic Engineers (ITE), or other acceptable standard. Adequate pedestrian access shall be provided between the shared parking lot and the associated buildings and uses.

Deleted: district

Deleted: under Section 7.6.1

Commented [PS67]: The deleted text is from Sections 6.10.2 and 6.10.3, which are standards of the P-1, Vehicle Parking District. We believe that this district can be deleted and additional provisions added to the general parking standards to achieve the intended outcome of the P-1.

Deleted: S

Deleted: a rear yard or side yard. Off-street parking

Deleted: ¶
<#>¶

Deleted: Shall

Deleted: three hundred (

Deleted:)

Deleted: May

Deleted: two

Deleted: ¶
<#>¶

Deleted: Board of Appeals

Deleted: .

(b) **Shared Parking Agreement.** A written shared parking agreement between joint users in a form approved by the Planning Commission and Township attorney shall be recorded with the Grand Traverse County Register of Deeds. The agreement shall assure the continued availability of the off-site parking facilities for the uses it is intended to serve.

(4) **Fractional Spaces.** When units of measurement determining the number of required parking spaces result in a fractional space, any fraction up to and including ½ shall be disregarded and fractions over ½ shall require 1 parking space.

(5) **In Cases of Uses Not Specifically Mentioned.** The requirements of off-street parking spaces shall be in accord with the use which the Zoning Administrator considers is similar in type based on the most recent edition of the *Parking Generation*, published by the Institute of Traffic Engineers (ITE), or other acceptable standard applicable for that use or a similar use.

(6) **Use of Off-Street Parking Areas.** Shall prohibit commercial repair work, storage of merchandise, or servicing or selling of trucks or motor vehicles.

(C) **Definitions.**

(1) The term "**Floor Area**" as applied in this Section is that area used or intended to be used for the sale of merchandise or services, or for use to serve patrons, clients, or customers, but excluding floor areas which are used or intended for use exclusively for storage, for housing of mechanical equipment integral with the building, hallways, or utilities or maintenance facilities. Measurement of floor area shall be of the sum of the horizontal areas of the several floors of the building, measured from the interior faces of the exterior walls.

(2) **"Dwelling Unit,"** as used in this section, shall be consistent with the definition of dwelling unit contained in *Article 2*.

Section 9.02 Parking Space Requirements (currently Section 7.6.3)

The number of required off-street parking spaces in all Districts shall be provided in accordance with the following minimum requirements. However, the Planning Commission may modify the numerical requirements for off-street parking based on evidence that another standard would be more reasonable based of the level of current or future employment and/or level of current or future customer traffic. In determining whether to permit fewer parking spaces or require more parking spaces, the Planning Commission shall consult the most recent edition of the *Parking Generation*, published by the Institute of Traffic Engineers (ITE) , or other acceptable standard.

Use	Number of Parking Spaces per Unit of Measure
(A) Residential	
(1) One Family, Two Family, Multiple Family, Mobile Home (not in a Mobile Home Park), and Guest Houses	2 for each dwelling unit.
(2) Housing for the Elderly	1 for each 2 units, and 1 for each employee
(3) Mobile Home Park	2 for each mobile home site plus 1 for each employee, plus 1 visitors space for each 4 mobile homes.

Deleted: one-half (
Deleted:)
Deleted: one-half (
Deleted:)
Deleted: one (
Deleted:)
Deleted: :
Deleted: Two (
Deleted:)
Commented [PS68]: While "Housing for the Elderly" is covered under "Adult Foster Care," the Township may want to keep this requirement in case a nursing home is ever permitted.
Deleted: One (
Deleted:)
Deleted: two (
Deleted:)
Deleted: one (
Deleted:)
Deleted: Two (
Deleted:)
Deleted: one (
Deleted:)
Deleted: one (
Deleted:)
Deleted: four (
Deleted:)

(4) Adult Foster Care, Family Home or Small Group Home	1 for each non-resident employee on the maximum shift plus 1 for each 3 adult foster residents occupying the home, in addition to those required for permanent non-foster residents of the home.
(B) Institutional	
(1) Religious Institutions and similar places of assembly	1 for each 3 seats in the main assembly area plus 1 per 2 employees.
(C) Business and Commercial	
(1) Service Institutions, including Beauty Parlor or Barber Shop	1 per employee plus 2 for each beauty and/or barber shop chair.
(2) Restaurants, taverns, bars	1 for each 2 seats of legal capacity for the facility, plus 1 per employee on the largest shift.
(3) Gasoline Service Station and automobile repair garages	1 per gas pump, 2 for each service and repair stall, plus 1 for each employee on each shift. In no instance shall a required parking space or its maneuvering area conflict with vehicles being fueled or serviced or awaiting to be fueled or serviced.
(4) Laundromats and coin operated dry cleaners	1 for each 2 washing or dry cleaning machines.
(5) Retail Stores, except as otherwise specified herein	1 for each 150 square feet of floor area.
(6) Private Clubs, swimming pool clubs, or other similar uses	1 for each 2 members' families or individuals plus spaces for each accessory use, such as a restaurant or bar.
(7) Golf courses open to the general public, including miniature and "par 3" courses	3 for each 1 golf hole plus 1 for each 2 employees.
(8) Nursery or Child Care Centers	1 for each employee in the largest work shift and 1 per 10 persons cared for at one time, plus stacking spaces for 5 vehicles with 9 feet by 20 feet for each stacking space..
(9) Greenhouses and Nurseries (Retail Sales)	1 for each 150 square feet of floor area.
(10) Drive-Through Uses	5 stacking spaces per drive-through lane in addition to the requirements for other principal or accessory uses such as a restaurant, bank, or pharmacy.
(11) Indoor Recreation	1 per 3 persons of maximum occupancy as established by local, county, or state fire, building, or health codes, plus 1 parking space per employee on the largest shift.
(D) Offices	
(1) Business or professional offices, except doctors, dentists, or similar professions	1 for each 200 square feet of floor area.
(2) Professional Offices or doctors, dentists, or similar professions	1 for each 200 square feet of floor area plus 1 per employee on the largest shift.
(E) Industrial and Warehousing	

Deleted: Facility

Deleted: One (...)...for each non-resident employee on the ...

Deleted: Churches or Temples

Deleted: One (...)...for each three (...)...seats in the main unit of ...

Deleted: Two (...) ...

Deleted: One (...)...for each 2 seats of legal capacity for the ...

Deleted: One (...1)...for each service and repair stall, plus one ...

Deleted: One (...)...for each two (...) ...

Deleted: One (...)...for each one hundred and fifty (...50) ...

Deleted: One (...)...for each two (...) ...

Deleted: Two (2...)...for each one (...)...golf hole plus one (...)...f ...

Deleted: except ...ncluding miniature or ...

Deleted: One (...)...for each three hundred and fifty (350) squa ...

Deleted: One (...)...for each two hundred (...00) ...

Deleted: One (...)...for each one hundred (100...00) ...

(1) **Industrial or manufacturing establishments, research and testing laboratories, and related accessory offices**	5 plus 1 for every 1 employee for the largest working shift.
(2) **Warehouses or wholesale establishments and related accessory offices**	5 plus 1 for every 1 employee for the largest working shift.
(F) **Other Uses**	
(1) **Marinas and Boat Liveries**	1 space for each 150 square feet of building area, exclusive of area used for boat storage, plus 1 additional space for every 1.5 slips or mooring locations, excluding designated transient slips. Additional spaces will be required for such uses as stores and restaurants as provided herein.
(2) **Bed and Breakfast Establishments**	1 space per rental sleeping room in addition to the 2 spaces required for owner/occupant.
(3) **Hotel, Motel, Tourist Court**	1 for each sleeping room, plus 1 for each employee of the maximum working shift. Additional spaces are required for such uses as a restaurant or bar as provided herein.
(4) **Winery-Chateau, Local Food Production Facility, and Winery, Use by Right**	1 for each 150 square feet of retail floor space in the "tasting room," plus 1 for each employee of maximum working shift, plus 3 spaces sized appropriately for tour buses or cars with trailers. Additional spaces are required for other uses as provided herein (e.g., dwelling, bed and breakfast, etc.),
(5) **Headquarters Building (Recreational Unit Park and Campground)**	1 for each 200 square feet of floor area plus 1 for each employee on the largest working shift.
(6) **Recreational Unit Site**	Each site shall have a parking space for at least 1 vehicle other than the recreational unit.
(7) **Self Service Storage Facility**	2 for the manager's residence plus 1 per 25 storage units, to be located at the office at the storage complex. In no instance shall less than 5 parking spaces be provided on-site.

Deleted: Five (...)...plus one (...)...for every one (...)

Deleted: Five (...)...plus one (...)...for every one (...)

Deleted: One ... space for each one hundred fifty (...50)...squar

Deleted: One (...)...space per rental sleeping room in addition t

Deleted: One (...)...for each sleeping room, plus one (...)

Deleted: One (...)...for each one hundred fifty (...50)...square fe

Deleted: One (...)...for each two hundred (...00)...square feet of

Deleted: one (...)

Section 9.03 Off-Street Parking Site Development Requirements (currently Section 7.6.4(1) and (2))

All off-street parking areas shall be designed, constructed, and maintained in accordance with the following standards and requirements:

(A) **Permit Required.** No parking lot shall be constructed until a permit therefor is issued by the Zoning Administrator.

(B) **Design.** Before such permit is issued, plans and specifications shall be submitted to the Zoning Administrator showing the location, capacity, size, site design, surfacing, marking, lighting,

drainage, entrances, exits, and any other detailed features essential to the design and construction of the proposed parking facility.

(1) **Parking Layout.** Plans for the layout of off-street parking facilities shall be in accord with the following minimum requirements:

Parking Space Angle	Maneuvering Lane Width	Parking Space Width	Parking Space Length
75° to 90°	20 feet	9 feet	20 feet
54° to 74°	15 feet	9 feet	20 feet
30° to 53°	12 feet	9 feet	20 feet
Parallel	12 feet	8 feet	23 feet

Commented [PS69]: We recommend making the width of all parking spaces 9 feet. While the length of spaces and maneuvering lane will change based on the angle, parking space widths typically won't change based on the angle.

Deleted: 8

Deleted: , 6 inches

Deleted: 8

Deleted: , 6 inches

Figure 13. Parking Layout

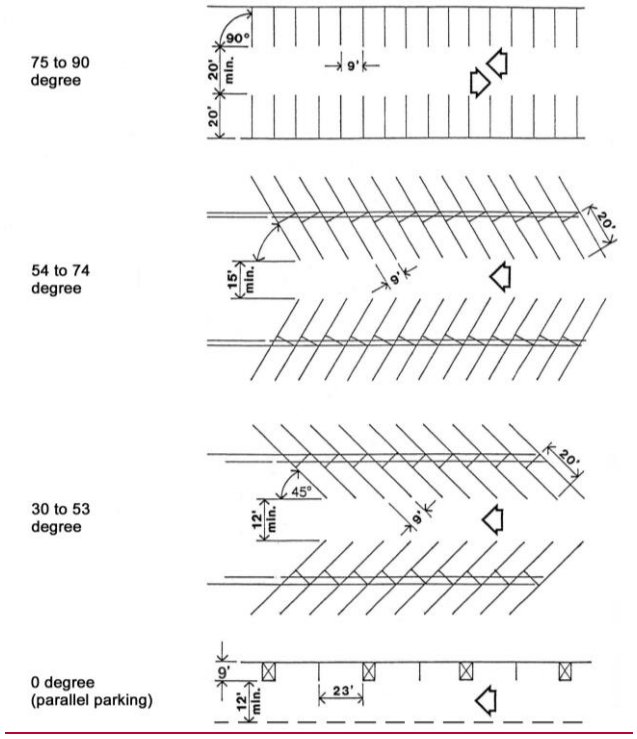

(2) **Maneuvering Lanes.** All parking spaces shall be provided access by maneuvering lanes. Backing directly onto a street shall be prohibited.

(3) **Driveway Access.** Adequate ingress and egress to the parking lot by means of clearly defined drives shall be provided for all vehicles. Ingress and egress to a parking lot lying in

an area other than residential use shall not be across land zoned for residential use. Where 2 or more lots allow for shared access, shared access easements shall be provided for all shared access drives to ensure that the internal circulation system connects to the internal circulation system on adjacent lots. The cross-access agreement shall provide for reciprocal cross-access for connection to adjacent lots without limitation.

(4) Driveway Spacing. Each entrance and exit to and from any off-street parking lot located in an area other than single-family residential use shall meet the following spacing requirements:

(a) From Adjacent Property in a Residential District. At least 25 feet distant from adjacent property located in any residential district.

(b) From Other Driveways on the Same Side of the Road. At least 300 feet from any driveway on the same side of the road. For sites that cannot meet the driveway spacing standards due to insufficient road frontage or the presence of natural features that cannot be altered (e.g., slopes and trees), the Planning Commission may modify the driveway spacing requirements.

(c) From Road Intersections. At least 100 feet from any intersection of 2 roads on the same side of the road or opposite side of the road. For sites that cannot meet the driveway spacing standards due to insufficient road frontage or the presence of natural features that cannot be altered (e.g., slopes and trees), the Planning Commission may modify the driveway spacing requirements.

(5) Surface. Except for single-family residential lots, all parking areas, including parking spaces and maneuvering lanes, shall be surfaced with a material that shall provide a durable, smooth, and dustless surface, and shall be graded and drained to dispose of all collected surface water. The surface shall be maintained in a durable, smooth, and dustless condition.

(6) Lighting. All lighting shall conform to the requirements of *Section 8.07*.

(7) Vehicle Stacking. Ingress and egress to the parking lot shall provide adequate stacking space so that vehicles do not block the ingress/egress road or park on public road shoulders.

Section 9.04 Off-Street Loading and Unloading

If the proposed use requires frequent loading and unloading by large vehicles, the Planning Commission may require 1 or more off-street loading spaces. The off-street loading spaces shall be 10 feet wide and 25 feet long, and shall have a vertical clearance height of 14 feet.

Section 9.05 Snow Storage (currently Section 7.6.4(4))

Whenever a development requiring off-street parking has parking areas containing over 2,700 square feet or more, provision shall be make for on-site snow storage area in addition to the required parking lot area. Snow storage shall be provided on the ratio of 15 square feet per 100 square feet of parking lot surface area. Snow storage areas shall be located in such manner that when utilized they do not

Deleted: zoned for

Deleted: zoned for

Deleted: be a

Deleted: twenty-five (

Deleted:)

Deleted: ;

Deleted: Section 7.14

Commented [PS70]: Currently, the Zoning Ordinance does not include minimum loading standards. Rather than proposing conventional loading space standards that are found in most zoning ordinance (many of which lead to too many loading spaces), we recommend giving the Planning Commission discretion on a case-by-case basis.

Deleted: twenty seven hundred (

Deleted:)

Deleted: fifteen (

Deleted:)

Deleted: one hundred (

Deleted:)

interfere with clear visibility of traffic or adjacent streets and highways and the landscaping required in *Article 10* is protected from damage.

Deleted: Section 7.5.4(3)

Section 9.06 Driveway Clearance (currently Section 6.2.5)

To reduce fire hazard and make possible access to all dwellings and other buildings by the Fire Department, no driveways shall have a width or overhead clearance less than 13 feet from bordering trees, overhead wires and other obstructions.

Deleted: thirteen (

Deleted:)

Section 9.07 Private Roads (currently Section 7.10)

(A) Private Road Permit. The Zoning Administrator shall issue a preliminary private road permit prior to the commencement of any construction work on a private road. Such permit shall only be issued after the initial plans, specifications, drainage plan, easement language, and joint maintenance agreement have all been approved. The final private road permit shall be issued after the private road has been constructed and, if requested by the Zoning Administrator, certification has been made by a Licensed Professional Engineer that the facility was built according to the submitted plans and specifications or that any deviation from the approved plans and specifications does not impair the functional intent of the approved design.

(1) No parcel of land or lot created after the adoption of this amendment shall be issued a land use permit without having the required lot width or frontage width along a public road or a private road.

Deleted: ,

Deleted: , or an approved frontage road

(2) No land use permit for a structure shall be issued until the preliminary private road permit has been issued, and no occupancy permit shall be issued until the final private road permit has been issued by the Zoning Administrator.

(3) Only public roads shall be used to access non-agricultural commercial, industrial or business uses, however private internal roads may be used as access to individual buildings or uses within an approved development.

(B) Joint Maintenance Agreement.

(1) A proposed easement and road maintenance agreement shall be provided to the Township Zoning Administrator. The easement and road maintenance agreement shall provide as a minimum:

(a) Majority vote rules regarding road maintenance and improvement decisions.

(b) The owner of each parcel will be responsible for payment of the share of costs apportioned to his or her parcel.

(c) The owners shall have standing and the right to commence legal or equitable action against a delinquent parcel owner or parcel owners to foreclose a lien or otherwise collect the sums owed.

(d) The agreement shall be recorded and shall run with the land and bind and benefit the parcels, and the owners, heirs, successors, assigns, and transferees thereof, in perpetuity.

(e) The owner or owners of the land served by the road shall provide for the requirement to grade, drain, and otherwise maintain the private road in accordance with the requirements of Township ordinances.

Deleted: the ordinance

(f) A statement that the owners have not asked the Grand Traverse County Road Commission to accept the road as a public road. As such, the roadway will be private and the Road Commission will have no obligation to maintain the road in any manner. This provision does not prevent the future upgrading to County Road Standards nor requesting the road to be taken over by the County Road Commission.

(g) The road maintenance agreement shall allow the Township to repair and maintain private roads if, after 90 days prior notice, the owners do not repair or maintain the private roads in accordance with this Ordinance. Repairs or maintenance considered by the Township to be of an emergency nature may be done sooner by the Township with prior notice.

(2) The easement and road maintenance agreement shall be reviewed and approved by the Township Attorney for compliance with the Township regulations. Following approval of the Township Attorney, the agreement shall be recorded with the Grand Traverse County Register of Deeds.

(C) Drainage Plan. A Drainage Plan meeting the approval of the Soil Erosion and Sedimentation Control Officer shall be prepared by a registered professional engineer, which plan will control erosion and retain storm water on site or direct it to a proper drainage course. The drainage plan, as it affects the roadways shall indicate the manner in which surface drainage is to be disposed of. To accomplish this will usually require making use of existing ditches, natural water courses, or constructing tributaries thereto. An easement of 20 feet or more in width shall be provided when the drain crosses private property within the project or adjacent to it. The drainage plan shall conform to the requirements of all agencies having jurisdiction. The owner or owners of the land served by the road shall provide in a road maintenance agreement for the requirement to grade, drain, and otherwise maintain the private road in accordance with the requirements of the ordinance.

Deleted: Grand Traverse County

Deleted: twenty (

Deleted:)

(D) Right-of-Way, Temporary Grading Easements, and Utility Easements. The following right-of-way, temporary grading easements and utility easements are required for all private roads:

(1) Right-of-way or Easement Access Minimum Width of 33 feet. The private road including shoulders and ditches shall be located within this Right of Way or Easement Access.

(2) Temporary Grading Easement. A Temporary Grading Easement of at least 16.5 feet shall be provided on each side of the Right-of-way or Easement Access until such time as the road is completed. Greater Temporary Grading Easements may be required on steep slopes so that the road, including shoulders and ditches can be constructed within the Right-of-way or Easement Access according to the plan provided for by *Section 9.07(I)*.

Deleted: Section 7.10.9

(3) Utility Easement. A 10-foot wide Utility Easement for public and private utilities shall be provided on each side of the Right-of Way or Easement Access and may be within a Grading Easement or located outside the Grading Easement.

Deleted: – Minimum Width of 10 feet

(E) Hold Harmless Agreement. Waiver or indemnification and "hold harmless" agreement to benefit the municipality, as approved by the Township Attorney.

(F) Road Layout.

(1) The road layout shall conform to any adopted road plan of Peninsula Township and shall also conform to the pattern established by adjacent roads.

(2) All existing roads that terminate at the boundaries of a proposed development shall be connected with the road system of the proposed development.

(3) Suitable access from an isolated (i.e., landlocked) parcel previously dependent on this property for sole access to existing public roads must be provided such access by easement or dedication.

(4) The layout of roads shall provide as much as possible for a continuous circuit for travel. In special cases where the lands to be divided are limited in area or are subject to a natural barrier, the Township Board or Zoning Administrator may approve a dedication which provides access to another road at one end only if a cul-de-sac of 40-foot minimum roadbed radius with 60-foot radius right-of-way is provided at the terminus of the road to permit turning in a continuous circuit. The Fire Department may require a larger roadbed radius or right-of-way radius. No more than 5 driveways will be permitted to enter the cul-de-sac beyond the point of curvature at the beginning of the cul-de-sac. A cul-de-sac shall not be allowed where it is reasonable to connect to adjacent properties. Refer to sketches of typical cul-de-sac (*Figure 14*) and typical intersection (*Figure 15*).

Deleted: forty (

Deleted:)

Deleted: sixty (

Deleted:)

Deleted: five

Deleted: Figure 2,

(G) Road Names. All private roads shall have a road name approved by the Township Board. The proprietor shall furnish and erect road name signs at all intersections within the project and entrances thereto to assist in the location of the property by emergency vehicles. The design and color of the road name signs shall be as approved by the Grand Traverse County Road Commission.

Deleted: serving more than two residential properties and if required by the County Equalization Department

(H) Signs. Traffic control signs shall be placed in accordance to the Michigan Manual of Uniform Traffic Control Devices. Signs marked "Private Road" shall be erected and maintained by the Proprietor at the entrance to all private roads in subdivisions, condominiums, or other residential developments.

Deleted: and

(I) Required Improvement Specifications.

(1) Plan and Profile.

(a) Plan and profile drawings shall be prepared by the Proprietor's Registered Professional Engineer in detail complete enough to be used as construction plans.

(b) Detailed Construction plans shall be provided at a scale of 1 inch = 100 feet or larger and shall include:

(i) Detailed survey drawings showing the easement, proposed road location and all parcels benefitted by the private road. The plan shall incorporate all construction standards of the Township.

(ii) The proposed gradients of all roads and the location of drainage facilities and structures, as well as other pertinent information.

(iii) Utility easements shall be shown on the plan and such utility easements shall include public sewer, water, and gas as well as telephone, electric, and cable easements.

(c) Vertical curves shall be used at all changes in grade. Sight distance, horizontal and vertical alignment shall be based on a minimum design speed of 25 miles per hour. Sight distance and alignment shall be in accordance with current A.A.S.H.O. standards for Geometric Design. Horizontal curve radii, vertical curve lengths, and percent of grade shall all be shown on the plan and profile drawings.

(d) For design of roadbed, shoulders, ditch profiles, and slope requirements refer to *Figure 16, Figure 17, Figure 18*, and *Figure 19*.

(e) Two copies of the plan and profile drawings shall be forwarded to the Zoning Administrator for approval. More detailed construction plans may be required by the Zoning Administrator or Township Engineer. One copy will be returned to the Proprietor's engineer with approval or necessary revisions marked thereon. Approval must be obtained before construction begins.

(2) Clearing, Grubbing and Maintenance. All trees, stumps, brush, and roots thereof shall be entirely removed between the outside limits of the ditches and also within the 25-foot radius at all intersections whichever is greater. Maintenance of the cleared area shall be performed as necessary to keep the area clear of trees and brush.

(3) Grades and Paving. Permissible percent grades on any private road shall be within the following ranges:

Grades and Paving	
Maximum	9 percent
When the conditions below are met	12 percent
Cul-de-sac	1 percent
Minimum	0.4 percent

Private roads with grades of up to 9 percent shall have a roadbed width of not less than 18 feet and may be paved or have a gravel surface approved by the Township Engineer and shall have 2-foot shoulders on each side. With grades greater than 9 percent, the

Deleted: "

Deleted: '

Deleted: frontage

Deleted: twenty-five (

Deleted:)

Deleted: MPH

Deleted: Figure 1, sketch of typical road cross sections

Deleted: 25

Deleted: %

Deleted: %

Deleted: %

Deleted: %

roadbed width shall be surfaced with bituminous pavement to a width of not less than 20 feet. Integral bituminous raised edge may be used in areas subject to severe erosion, possibly eliminating the need for roadside ditches. Minimum width between beginnings of raised edges shall be the same as for a paved roadbed.

(4) **Drainage Structures and Erosion Control.** Drainage structures shall be installed as indicated on the Drainage Plan. Minimum diameter of culverts shall be 12 inches unless a smaller diameter is approved by the Drain Commissioner and/or County Road Commission. The bottom ends of culverts shall extend to the bottom of the slope. Either concrete culvert pipe, corrugated metal pipe or corrugated polyethylene pipe meeting Michigan Department of Transportation specifications of the required size and strength may be used. Standard flared end sections shall be used on all road cross-culverts. Guard posts shall be placed beside the ends of cross culverts to mark their location.

Bridges shall be designed for HS-20 or more loading on all roads. Culverts at driveway entrances may be necessary. Sodding, rip-rapping, sediment basins, topsoil, seeding, mulching, or other methods of erosion control shall be used in accordance with the recommendations of the Soil Erosion and Sedimentation Control Officer and the Drain Commissioner.

(5) **Surfacing.** A minimum total depth of 6 inches of compacted dense aggregate shall be placed on private roads.

Deleted: six

(a) The aggregate base course shall be placed on the prepared sub-grade for the entire width of the roadway in accordance with the Standard Plans for Private Roads (*Figure 16, Figure 17, Figure 18,* and *Figure 19*). All material specifications shall meet the current MDOT specifications.

Deleted: Figure 1

(b) Where bituminous aggregate pavement is required, bituminous aggregate pavement course Michigan Department of Transportation Specification 4.11 20AA Aggregate (or an alternate mix approved by the Zoning Administrator) applied in 2 or more courses, shall be placed at the minimum rate of 275#/SYD, the leveling course shall be placed at a rate of 165#/SYD with the remainder placed on the surface course. A time period of no more than 1 year shall elapse between the placements of any 2 courses of bituminous pavement. A bituminous prime coat applied at the rate of 0.25 gal/SYD on the prepared aggregate base course and a bituminous bond coat applied at a rate of 0.10 gal/SYD between pavement courses will be required.

Deleted: two

Deleted: one

Deleted: two

(c) Shoulders shall be stabilized with 2.5 inches or more of good compacted topsoil over 6 inches of compacted gravel. Shoulders shall be sodded or seeded and mulched to insure an adequate covering of grass.

Deleted: 2 ½"

Deleted: "

(6) **Intersections.**

(a) **Angle of Intersection.** Roads shall intersect at 90 degrees or closely thereto and in no case at less than 80 degrees.

Deleted: ninety (

Deleted:)

Deleted: eighty (

Deleted:)

(b) Sight Triangles. Minimum clear sight distance at all minor road intersections shall permit vehicles to be visible to the driver of another vehicle when each is 125 feet from the center of the intersection.

(c) Number of Roads. No more than 2 roads shall cross at any 1 intersection.

(d) "T" Intersections. "T" type intersections shall be used where practical.

(e) Centerline Offsets. Slight jogs at intersections shall be avoided if possible. Where such jogs are unavoidable, road centerline shall be offset by a distance of 150 feet or more.

(f) Vertical Alignment of Intersection. A nearly flat grade with appropriate drainage slopes is desirable within intersections. This flat section shall be carried back 50 feet from the center of the intersection.

(7) Utilities. Adequate utility easements shall be provided within or adjacent to the right-of-way and dedicated to the public for sewer, water, gas, electric, telephone and cable use. All sewer, water, electrical, telephone, cable, and gas utilities which are placed underground in the private road right-of-way shall be placed prior to final soil erosion measure work where at all possible.

(J) Private Road Approval Process.

(1) Sufficient copies of complete construction plans, drainage plan, easement and road maintenance agreement, and hold harmless agreement shall be presented to the Zoning Administrator who shall submit the copies of the hold harmless agreement, easement, and the road maintenance agreement to the Township Attorney for review and approval. The applicant shall also submit copies to the County Road Commission, Department of Transportation, Drain Commissioner, and County Soil Erosion Office for their review and comment and any appropriate permits.

(2) The Zoning Administrator shall review the plans and the proposed benefitting properties for conformance with the Township Master Plan, the Zoning Ordinance, the Subdivision Control Ordinance, the Land Division Ordinance, and any other requirements of the Township.

(3) The Zoning Administrator shall issue a preliminary private road permit prior to the commencement of any construction work on the road. Such permit shall only be issued after the initial plans, specifications, easement language, joint maintenance agreement, and hold harmless agreement have all been approved, and appropriate reviews and permits have been received from the agencies to whom copies were submitted in accordance with *Section 9.07(J)(1)*. The final private road permit shall be issued by the Zoning Administrator after the private road has been constructed and certification has been made by the Township Engineer that the facility was: (a) built according to the plans and specifications; and/or (b) that any deviation from the approved plans and specifications does not impair the functional intent of the approved design.

Deleted: one hundred twenty five (
Deleted:)
Deleted: two (
Deleted:)
Deleted: one (
Deleted:)
Deleted: one hundred fifty (
Deleted:)
Deleted: fifty (
Deleted:)
Deleted: Condominium Subdivision
Deleted: Section (1) above
Deleted: a licensed professional engineer

(4) In order to ensure that the requirements of this section are complied with, the Zoning Administrator is hereby authorized to require that construction regulated by this section be inspected by the Township Engineer with appropriate certification provided to the Zoning Administrator. The cost of such inspection shall be paid by the applicant prior to the issuance of the final road permit.

(K) Existing Non-Conforming Private Roads. Roads existing and used as private roads at the time this Section and amendment thereto is originally approved, and which do not meet the right-of-way widths of this ordinance may continue to be used, provided that the easement, drainage, utility, grade, roadbed, shoulder, paving, and other requirements are met in accordance with the following prior to the issuance of land use permits, occupancy permits, new lots, or private road extensions:

	Improvement Proposed				
Private Road Improvement Required	Land Use Permit: Excluding New Homes	Land Use Permit: New Home on Existing Lot	Creation of 1-4 New Lots on Private Road	Creation of 5 or More New Lots on Private Road	Extend Private Road
Joint Maintenance Agreement, per *Section 9.07(B)*	3	3	1	1	1
Drainage Plan, per *Section 9.07(C)*	3T	2	1	1	1
Easement Dedication, per *Section 9.07(D)*	2	2	1	1	1
Hold Harmless Agreement, per *Section 9.07(E)*	2	2	1	1	1
Road Layout, per *Section 9.07(F)*	3	3	1	1	1
Road Names, per *Section 9.07(G)*	3	3	1	1	1
Road Signs, per *Section 9.07(H)*	3	3	1	1	1
Plan and Profile, per *Section 9.07(I)(1)*	3	3	1	1	1
Clearing, Grubbing, and Maintenance, per *Section 9.07(I)(2)*	3T	2	1	1	1
Grades and Paving, per *Section 9.07(I)(3)*	3	3	1	1	1
Drainage Structures and Erosion Control, per *Section 9.07(I)(4)*	3T	2	1	1	1
Surfacing, per *Section 9.07(I)(5)*	3	3	1	1	1
Intersections, per *Section 9.07(I)(6)*	3	3	1	1	1
Utilities, per *Section 9.07(I)(7)*	2	2	1	1	1

1 = Required Compliance for the entire private road.
2 = Required Compliance for the portion of private road abutting the lot subject to the Land Use Permit.
3 = Not Required.
T = Township may require compliance for the private road abutting the lot subject to the Land Use Permit if the Township determines compliance is necessary to preserve the health, safety, and welfare

(L) Guarantee of Completion of Required Improvements. See *Section 7.02(C)*.

Deleted: insure

Deleted: a licensed engineer

Deleted: amendment

Deleted: and

Deleted: or

Deleted: for new structures by the Zoning Administrator.

Deleted: The Township Board may require all improvements and facilities to be completed before it approves the final plat, condominium plan or project plan.¶
<#>¶
<#>In lieu of the actual installation of required public improvements, or soil erosion measures not covered by Act 347 of P.A. 1972, the Township Board may permit the applicant to provide a financial guarantee of performance in one or a combination of the following arrangements for those requirements which are over and beyond the requirements of the County Road Commission, County Drain Commissioner of any other agency responsible for the administration, operation or maintenance of the applicable public improvement. The Township Board may waive financial guarantees of performance under this Ordinance for road lights, or road trees. In case these improvements are specified, completion may be required prior to the issuance of occupancy permits by the Zoning Ordinance.¶
<#>¶
<#>**Performance or Surety Bond.**¶
<#>¶
<#>**Accrual.** The bond shall accrue to the Township, covering construction, operation and maintenance of the specific public improvement.¶
<#>¶
<#>**Amount.** The bond shall be in an amount equal to the total estimated cost for completing construction of the specific public improvement, including contingencies, as estimated by the Township Board.¶
<#>¶
<#>**Term Length.** The term length in which the bond is in force shall be for a period to be specified by the Township Board for the specific public improvement.¶
<#>¶
<#>**Bonding or Surety Company.** The bond shall be with a surety company authorized to do business in the State of Michigan, acceptable to the Township Board.¶
<#>¶
<#>The escrow agreement shall be drafted at the expense of the developer and approved by the Township Attorney.¶
<#>¶
<#>Cash Deposit, Certified Check, Negotiable Bond, or Irrevocable Bank Letter of Credit.¶
<#>¶
<#>**Treasurer, Escrow Agent or Trust Company.** A cash deposit, certified check, negotiable bond, or an irrevocable bank letter of credit, such surety acceptable by the Township Board, shall accrue to the Township. These deposits shall be made with the Township Treasurer, or deposited with a responsible escrow agent, or trust company, subject to the approval of the Township Board.¶
<#>¶
<#>**Dollar Value.** The dollar value of the cash deposit, certified check, negotiable bond, or an irrevocable bank letter of credit, shall be equal to the total estimated cost of construction of the specific public improvement including contingencies, as estimated by the Township Board.¶
...

Figure 14. Typical Cul-De-Sac

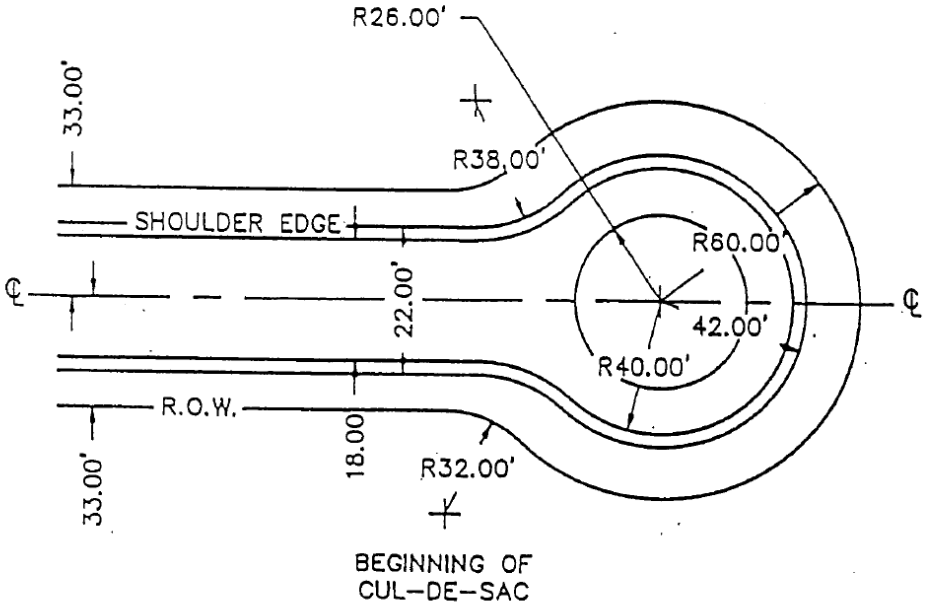

Figure 15. Typical Intersection

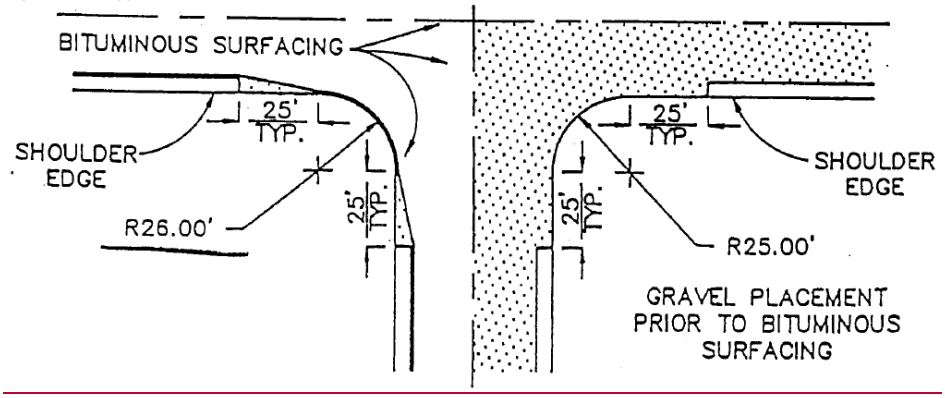

Figure 16. Typical Road Section A - A

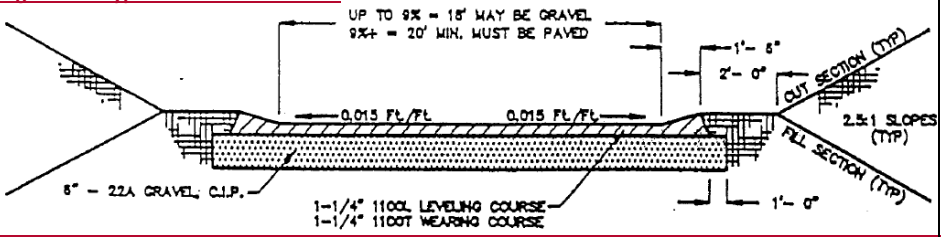

Figure 17. Typical Road Cross Section B - B

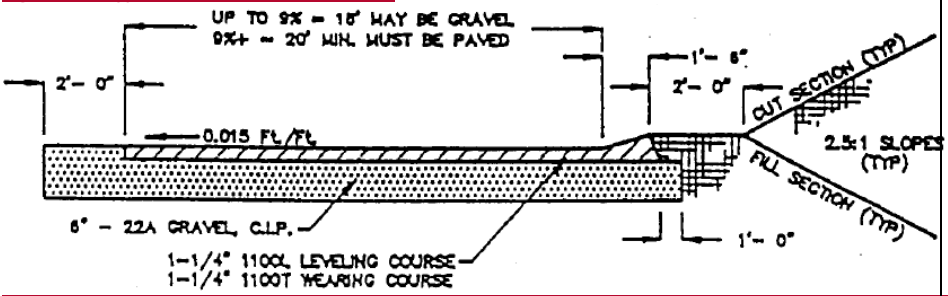

Figure 18. Bituminous Curb Detail

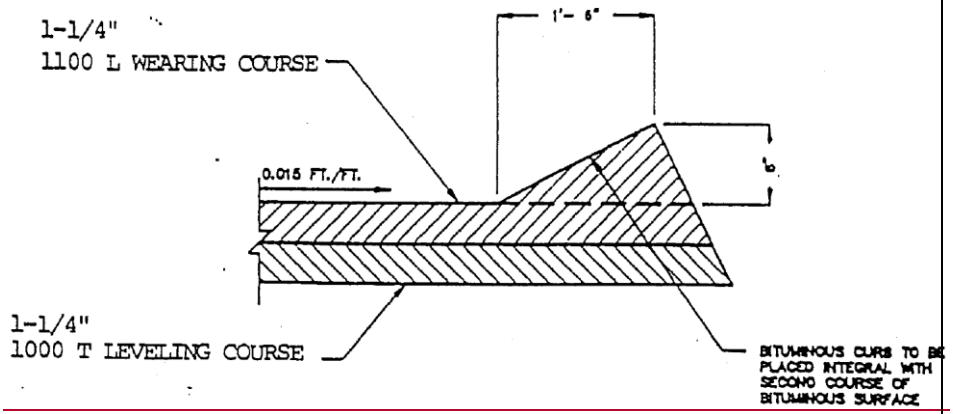

Figure 19. Typical Ditch Detail

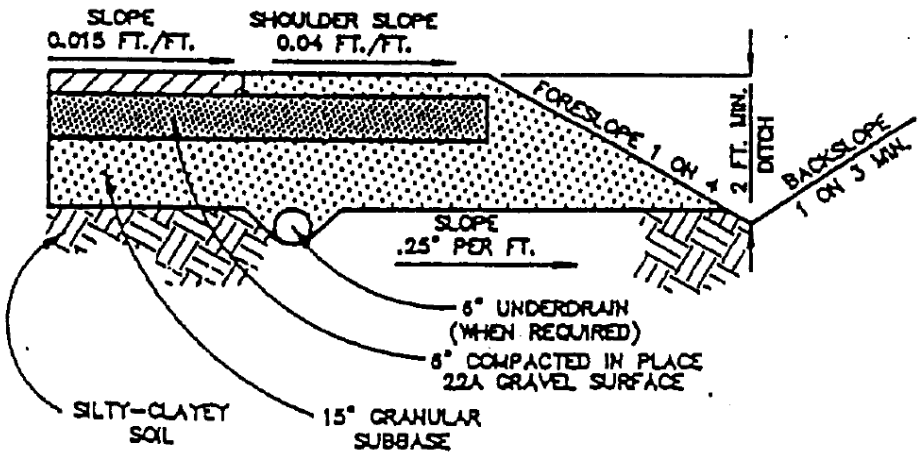

Section 9.08 Shared Driveways

Commented [PS71]: Per the Planning Commission's request, we have proposed Shared Driveway standards. We have worked with similar Shared Driveway standards before and they have been successfully implemented.

(A) Application and Review.

(1) Application. Shared driveways require approval by the Planning Commission, subject to an application. An application for a shared driveway shall include the following:

(a) Plot Plan. A plot plan drawn to a scale of not less than 1 inch equals 100 feet (1" = 100') delineating the proposed alignment of the driveway and the lots it is to serve. The Township Engineer may require additional data to be submitted, such as existing topography, proposed grades, and soil conditions.

(b) Maintenance Agreement. A maintenance agreement signed by applicant/owner(s) and approved by the Township Attorney, to be recorded with the Township Clerk and County Register of Deeds providing for:

(i) A method of initiating and financing such shared driveway in order to keep the shared driveway up to the specifications of this Section.

(ii) A workable method of apportioning the costs of maintenance and improvements to current and future lots along such shared driveway.

(c) Easement Agreement. An easement agreement signed by the applicant/owner(s)) and approved by the Township Attorney, to be recorded with the Township Clerk and County Register of Deeds providing for:

(i) Easements to the public for purposes of emergency and other public vehicles for whatever public services are necessary.

(ii) A provision that the owners of any and all of the property using the shared driveway shall refrain from prohibiting, restricting, limiting or in any manner interfering with normal ingress, egress , public utilities, and use by any of the other owners. Normal ingress and egress and use shall include use by family, guests, invitee, vendors, tradesman, delivery persons, emergency vehicles, and others bound to or returning from any of the properties having a need to use the driveway.

(d) Restrictive Covenants. Restrictive covenants or other legally binding tool, found acceptable by the Township Attorney and to be recorded with the Township Clerk and County Register of Deeds, prohibiting any division of lots served by the shared driveway from being further divided in excess of the maximum permitted number of lots served by such shared driveway, according to *Section 9.08(B)(3)* below.

(2) Planning Commission Review. The approving body for an application for a shared driveways shall be the Planning Commission. The Zoning Administrator shall forward all relevant application materials for review and comment to the Fire Chief, Township Attorney, and Township Engineer. Upon a finding that the application materials conform to the requirements and standards of this Section and Ordinance, the Planning Commission shall approve, or approve with conditions, the application.

(B) Development Standards. Shared driveways shall comply with the following standards in addition to all other applicable standards of this Ordinance:

(1) Minimum Width. The driveway surface shall be a uniform minimum 12 feet wide, measured edge to edge, with 18 feet wide passing flares provided at least every 300 feet. Passing flares shall be at least 60 feet in length (See *Figure 20*).

(2) Maximum Length. The shared driveway shall not exceed 1,000 feet in length.

(3) Maximum Number of Lots Served. The shared driveway shall not serve more than four (4) dwelling units.

(4) Address Signs. All addresses served by the shared driveway shall be clearly marked at its point of intersection with a road, and such addresses shall also be clearly marked at any location a private driveway splits from the shared driveway.

(5) Name Prohibited. No shared driveway shall be posted with a name.

(6) General Driveway Standards. Shared driveways shall comply with the requirements and standards of all driveways, where applicable, including the driveway clearance requirements of *Section 9.06*.

(7) Emergency Vehicle Turnaround. Shared driveways more than 150 feet in length shall include an area dedicated to emergency vehicle turnaround that meets the standards of the International Fire Code, which may be amended from time to time.

Figure 20. Shared Driveway Design

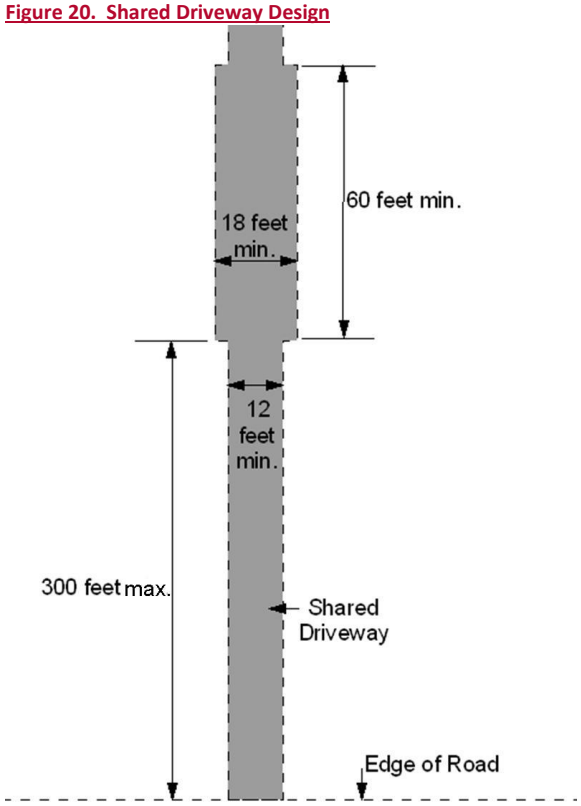

Article 10 Landscaping and Screening

Section 10.01 Intent (NEW SECTION)

The intent of this Article is to provide for landscaping where necessary to enhance the visual character of the Township, allow landscaping as a visual transition between land uses, and promote landscaping that protects the natural resources of the Township.

Section 10.02 Scope and Application (Section 7.6.4(3)(d))

(A) **Applicable Only to Uses Requiring Site Plan Approval.** The requirements in this Article apply to all uses, lots, sites, and parcels for which site plan approval is required and which are developed or expanded following the effective date of this Ordinance. No site plan shall be approved unless said site plan includes landscaping consistent with the provisions of this Article. Furthermore, no occupancy of land use shall occur unless the parking and landscape improvements have been completed or performance guarantee has been posted in accordance with the provisions set forth in *Section 7.02* to cover the cost of the contemplated improvements as estimated by the Zoning Administrator.

(B) **Changes in Use, Alterations, and Re-Occupancy.** In cases where the use of an existing building changes or an existing building is changed or otherwise altered or re-occupied, all of the standards set forth herein shall be met.

Section 10.03 Landscaping Design Standards (NEW SECTION, which will include standards from Section 6.6.3(3), and Section 7.6.4(3))

(A) **Frontage Landscaping (Section 6.6.3(3) and parts of 7.6.4(3)).** For all uses in the C-1, Commercial zoning district and all other uses with a parking lot containing over 2,700 square feet or more of parking area, including access drives thereto, the front yard area adjacent to the right-of-way shall be planted and maintained in accordance with the following:

(1) **Trees (Section 7.6.4(3)(b)(2)).** 1 deciduous, evergreen, or ornamental tree shall be planted adjacent to the public right-of-way for each 35 linear feet of frontage, or fraction thereof.

(2) **Walls with Shrubs (Section 7.6.4(3)(b)(3))** Where screens of non-living material are used for right-of-way screening (such as walls), at least 1 shrub or vine shall be planted on the right-of-way side for each 10 lineal feet of screen or fraction thereof.

(3) **Minimum Width (Section 7.6.4(3)(b)(1)).** Any required frontage planting strip shall be a minimum of 10 feet in width.

(4) **Right-of-Way Landscaping Prohibited.** Trees and shrubs required for frontage landscaping shall not be planted in a road right-of-way.

Deleted: No

Deleted: a completion bond, a cash deposit, a letter of credit or certified check

Deleted: has been deposited with the Zoning Administrator

Deleted: T

Deleted: front yard area and any side yard

Deleted: not used for parking or driveway space

Deleted: an appropriate landscape design, as designated by the Township Board

Deleted: .

Deleted: One

Deleted: (1) street

Commented [PS72]: McKenna's landscape architect recommends a minimum spacing of 35 feet to allow room for trees to grow without crowding each other out.

Deleted: twenty-four (24

Deleted:)

Deleted: lineal

Deleted: one

Deleted: of property line

Deleted: ten (

Deleted:)

Deleted: ten (

Deleted: ')

(5) Exemptions. The Planning Commission may modify or waive the frontage landscaping requirements where the site is a farm with an orchard or vineyard in the front yard or where frontage landscaping would block a scenic view area as shown on the Scenic View Map adopted or subsequently amended as part of the Peninsula Township Master Plan

(B) Parking Lot Landscaping (Section 7.6.4(3)(a), (b)(1), and (b)(4)). All parking areas containing over 2,700 square feet or more of parking area, including access drives thereto, shall be effectively landscaped with planting strips on the interior and perimeter on all sides adjacent or visible from surrounding properties or an abutting public street as follows:

(1) Perimeter Landscaping (Section 7.6.4(3)(b)(1)). Any required perimeter planting strip shall be a minimum of 10 feet in width. Any perimeter adjacent or visible from surrounding properties or an abutting public right-of-way shall contain 1 tree per 35 linear feet of perimeter. Each tree may be substituted with 8 shrubs.

(2) Interior Landscaping (Section 7.6.4(3)(b)(4). Parking lots with more than 2 parking aisles shall require landscaped areas of at least 10 square feet of interior landscaping for each parking space. Where interior location is not feasible, the Planning Commission may allow interior landscaping to be located within a 10 foot perimeter of the paved surface. Landscaped areas shall be a minimum of 160 square feet with a minimum dimension of 8 feet. Interior landscape areas shall be designed so as to create minimum interference with snow removal. One deciduous tree shall be planted for each 160 square feet of interior landscape area and each interior landscape area shall contain at least 1 deciduous tree.

(C) Greenbelt Buffer. Where a greenbelt is required in this Ordinance, the greenbelt shall consist of a staggered double row of 8-foot high evergreen trees spaced not more than 15 feet apart.

(D) Mechanical and Utility Equipment Screening. All mechanical equipment, utility meters, storage tanks, air conditioning equipment, transformers, or similar equipment, incidental to any building, including roof-mounted equipment shall be totally enclosed or screened from view from all lot lines and the right-of-way line, and shall be an integral part of the architectural or landscape design of the building and site. This requirement shall not apply to equipment serving 1 residence.

(E) Garbage, Refuse, and Recycling Collection Areas. All garbage, refuse, and recycling collection areas (i.e., dumpsters) shall meet the following requirements:

(1) Location. Waste receptacles (i.e. dumpsters) may be located in a rear or side yard setback, but shall not be located in front of the front building line. Dumpsters shall not encroach into a parking or circulation area, and shall be clearly accessible to servicing vehicles.

(2) Accessibility. Waste receptacles shall be conveniently accessible for servicing vehicles.

(3) Screening. An enclosure of sufficient height to completely screen the dumpster is required on 3 sides of the waste receptacle with a gate on the 4th side. The height of the

Deleted: twenty seven hundred (
Deleted:)
Deleted: and on all sides
Deleted: a
Deleted: .
Deleted: ten (
Deleted: ')
Deleted: two (
Deleted:)
Deleted: ten (
Deleted:)
Deleted: being defined as the area
Deleted: the
Deleted: seventy-five (75')
Deleted: eight (
Deleted: ')

enclosure shall be not less than 6 feet or at least 1 foot above the height of the dumpster, whichever is greater. Enclosures shall meet the following standards:

(a) The enclosure shall be constructed of pressure treated or wolmanized wood. The Planning Commission may require that the enclosure be constructed of brick or decorative concreate material that matches or complements the principal building or structure.

(b) Enclosure gates shall be constructed of steel-reinforced wood. Pressure treated or wolmanized wood shall be used.

(c) Enclosures shall be set back a minimum of 20 feet from any residential district.

(4) **Bollards and Similar Protective Devices.** If bollards or similar protective devices are required by the Planning Commission to protect a dumpster enclosure, the bollards (concrete filled metal posts) or similar protective devices shall be installed at the opening to prevent damage to the screening wall or fence.

(5) **Maintenance.** All dumpsters shall have a lid, which shall be remain closed. The dumpster shall be regularly emptied, and shall be maintained in accordance with all Township ordinances.

(F) **General Landscaping Defined (currently Section 7.6.4(3)(a)).** Landscaping areas shall consist of some combination of planted trees, shrubs, vines, ground cover, flowers, or lawns. In addition, the combination or design may include rock or mulch ground cover not to exceed 20 percent of the total of any landscaped area, earth mounds, and such structural features as fountains, pools, art works, screens, walls, fences, or benches, but such objects alone shall not meet the requirements of this article.

Deleted: mean

Deleted: twenty (

Deleted: %)

Deleted: section

Section 10.04 Standards for Plant Materials (part of Section 7.6.4(3)(b)(5))

(A) **Lawn Areas.** Lawn areas shall be planted in species of grass normally grown as permanent lawns in northwest Michigan unless other native grasses and plantings are deemed acceptable by the Township. Grass may be sodded or seeded and mulched, except that solid sod shall be used in swales or other areas subject to erosion unless a different method of erosion control is permitted by the Township . Sod or seed shall be clean, free of weeds and noxious pests or disease.

(B) **Recommended Species of Trees and Shrubs (Section 7.6.4(3)(b)(5)).** The selected combination of plant material shall be a harmonious combination of living deciduous and evergreen trees, shrubs, and vines hardy to the northwest Michigan region and so arranged to present as aesthetically pleasing whole. The Township may adopt a list of required or recommended species. The following are the required minimum sizes of plant materials:

Plant Type	Minimum Size
Evergreen Trees	8 feet minimum height
Deciduous Trees	3-inch minimum caliper
Ornamental Trees	2-inch minimum caliper
Deciduous Shrubs	3 feet minimum height
Evergreen Shrubs	30 inches minimum height
Spreading Shrubs	18 inches minimum height

(C) Prohibited Species. The Planning Commission or Planning Director may prohibit certain species that are invasive or otherwise undesirable.

(D) Minimum Requirements for Plant Material.

(1) All plant material shall conform to the description consistent with generally accepted and published nursery and landscape standards. Plant materials shall be typical of their species or variety, have normal habitat of growth, well-branched and densely foliated when in leaf.

(2) Plant materials shall be chosen according to soil, climatic conditions and environmental factors for the proposed development, the location of the installation, and its desired function.

(3) Artificial plant material is prohibited.

Section 10.05 Landscape Installation and Maintenance (parts of Section 7.6.4(3))

(A) Installation.

(1) Installation Period (Section 7.6.4(3)(e)). All required landscaping improvements are to be completed prior to the issuance of the Certificate of Occupancy. In the event of unusual delays or adverse weather conditions that make it impossible to plant, the Zoning Administrator may grant a single extension of the time limit for a further period of not more than 6 months and the owner shall post a performance guarantee in accordance with the provisions set forth in *Section 7.02*.

(2) Installation Method. All landscaping shall be installed in a manner consistent with generally accepted and published nursery and landscape standards, the approved landscaping plan, and the following:

(B) Maintenance (Section 7.6.4(3)(c)). It shall be the owner's responsibility to see that the landscaping is regularly maintained in a neat, clean, orderly and healthful condition. This includes, among other things, proper pruning, mowing of lawns, controlling or removing weeds, replenishing mulch, removal of litter, replacement of diseased, dead, or damaged plants when necessary, and the regular watering of all plants. All diseased, dead, or damaged plants shall be replaced immediately, unless the season is not appropriate for planting, in

Deleted: The

Deleted: within one year of the issuance of a land use permit

Deleted: six

Deleted: ing

which case such plant material shall be replaced at the beginning of the next planting season.

Section 10.06 Modifications (Section 7.6.4(3)(b)(6))

In consideration of the overall design and impact of the landscape plan, the application of the above standards may be adjusted by the Planning Commission, in part or in whole, to allow credit for healthy plant material to be retained on or adjacent to the site if such an adjustment is consistent with the intent of this Ordinance.

Deleted: The

Article 11 Signs

Section 11.01 Purpose (currently introductory paragraph of Section 7.11)

It is the intent of this Ordinance to limit the number and size of signs in order to prevent traffic hazards, promote safety for passersby, and to maintain the rural ambience and the environment of the Township. It is also the intent to allow signs that are appropriate, proportional, and in scale with adjacent uses and roadways, and which are compatible with the character of the community. The objectives of this article are:

(A) Traffic and Pedestrian Safety: To promote the free flow of traffic and protect pedestrians and motorists from injury and property damage caused by, or which may be fully or partially attributable to cluttered, distracting, or illegible signage. Also, to protect public safety by prohibiting or removing signs that are structurally unsafe or poorly maintained.

(B) Old Mission Peninsula Scenic Heritage Route. To allow Peninsula Township to regulate the size (including height and display area), lighting, and spacing (including setbacks and distances between billboards), and other regulatory powers pursuant to Act 153 of 1990 and the Old Mission Peninsula Scenic Heritage Route Guidebook, in order to control outdoor advertising along federal aid trunk line highways and encourage signage along M-37 to blend with the local character of the community.

(C) Free Speech. To ensure that the constitutionally guaranteed right of free speech is protected and to allow signs as a means of communication.

(D) Effective Communication. To allow signage of an appropriate design, scale, and placement for the purposes of communicating effectively in a manner that provides information, identification, and/or direction, without jeopardizing the beauty of the natural landscape or disrupting the environment of historically significant features or sites.

(E) Protection of Scenic Areas and Viewsheds. To regulate outdoor advertising in such a way as to create land use patterns that are in concert with future land use objectives of the Master Plan and to prevent signs that would detract from scenic roadways and scenic views (including the preservation of historic and cultural resources, scenic areas and viewsheds, and the dark night sky).

(F) Compatibility with the Area and Protection of Property Values. To insure compatibility with rural lands, neighborhoods, and business areas, in order to protect land values by preventing blight, visual clutter, excessive lighting, and out-of-scale signage that degrade the aesthetic views and/or property values of the community, thereby enhancing the image of the community for residents, tourists, and visitors.

(G) Economic Development. To allow for adequate and effective signage for businesses to inform, identify, and communicate effectively.

Deleted: ordinance
Deleted: in so far as possible
Deleted: which
Deleted: height,
Deleted: ,
Deleted: setback,
Deleted: billboards
Deleted: outdoor advertising
Deleted: , that

(H) Ease of Administration. To have standards and administrative review procedures that are simple for property owners, businesses, tenants, and sign installers to understand and follow.

Section 11.02 Definitions (NEW SECTION, which includes existing definitions in Section 3.2 related to signs)

The following definitions relate to signs in Peninsula Township.

(A) Sign Definitions, Sign Types. The following definitions apply to types of signs based on the characteristics of the sign without respect to the content of the message:

(1) Banner Sign. A sign made of natural or synthetic fabric; however, not including pennants or flags.

(2) Entrance Way Sign. A sign located near the public entrance of a permitted development.

(3) Flashing Sign. Any illuminated sign that pulsates, flashes, scrolls, fades, dissolves, osculates, spins, twirls, sequentially reflectorizes, or contains any other type of motion.

(4) Ground Monument Sign. A base-mounted, freestanding sign placed in the ground and not attached to any building or other structure.

(5) Ground Pole Sign. A freestanding sign supported by 1 or more uprights, poles, braces or some other structure, placed in the ground surface and not attached to any building.

(6) Flags. A sign on paper, cloth, fabric or other flexible or combustible material of any kind that is attached to a permanent conforming pole or attached flat to a wall.

(7) Illuminated Sign. A sign that utilizes artificial light internally or externally by either emission or reflection.

(8) Incidental Sign. A small sign, designed and located to be read only by people within the site and generally not visible or legible from the right-of-way or adjacent properties, intended to be used by people on-site to identify features of a land use such as building entrances, drop boxes, rest rooms, and handicapped ramps for the purpose of traffic safety. Such signs include traffic control signs that conform to the requirements of the Michigan Manual of Uniform Traffic Control Devices, or similar signs providing information to be read at close proximity.

(9) Ingress/Egress Sign. A small sign located adjacent to the entrance or exit drives of a development, intended to identify the points of vehicular ingress and egress for the purpose of traffic safety.

(10) Interior Directional Sign. A sign located on the interior of a development, intended to be used to direct visitors to within the development for the purpose of traffic safety.

(11) Marquee, Canopy, Awning Sign. An sign attached to a marquee, canopy, or awning projecting from the building.

Deleted: Sign,
Deleted: used to call attention to a land use or product, service, or activity
Deleted: Sign,
Deleted: that identifies a
Deleted: residential or industrial subdivision, apartment complex, condominium development, or permitted institution
Deleted: Sign,
Deleted: pulsating
Deleted: (including sequentially reflectorized)
Deleted: Sign,
Deleted: one (
Deleted:)
Deleted: Sign,
Deleted: Sign, Informational
Deleted: , on premises
Deleted: architectural
Deleted: features
Deleted: Sign,
Deleted: business
Deleted: Sign,
Deleted: which sets forth no advertising display,
Deleted: a land use
Deleted: Sign,
Deleted: /
Deleted: "Identification of Business"

(12) Pennant Sign. A small, often triangular, tapering flag used in multiples as a device to call attention.

(13) Portable Message Sign. A freestanding sign not permanently anchored or secured to the ground, including trailers or similarly mounted signs, signs on parked vehicles where the sign is the primary use of the vehicle or wheeled object, and signs on vehicles which because of the vehicle's placement and regularity of position serves the same purpose as a "Portable Message Sign. "Portable Message Signs" do not include customary signs located on vehicles that are operating lawfully or parked in a manner where the vehicle does not serve the same purpose as a "Portable Message Sign."

(14) Roof Sign. Any sign which is on or attached to the roof of a building.

(15) Wall Sign. A sign which is attached directly to, painted upon, or inscribed on a building wall.

(16) Window Sign. A sign that is painted on or attached to a window or glass door and is intended to be viewed from outside, including sign located inside a building but visible primarily from the outside of the building.

(17) Yard Sign. A portable temporary freestanding sign that is temporarily anchored or secured to the ground.

(B) Sign Definitions, General.

(1) Sign. Any device, structure, fixture, or placard using graphics, symbols, and/or written copy designed specifically for the purpose of advertising or identifying any establishment, product, good, or service, or any other message.

(2) Sign Face. That part of a sign structure which is used to graphically communicate a message or announcement.

(C) Sign Definitions, Sign Types Based on Activity.

(1) Sign, Off-Premise Commercial Advertising. A sign that identifies or communicates a message relating to an activity conducted, a service rendered, or a commodity sold at a location other than where the sign is located. Examples of off-premise commercial signs include, but are not limited to, the following:

(a) Sign, Permanent Billboard/Highway Advertising. An off-premise sign owned by a person, corporation or the entity that engages in the business of selling the advertising space on that sign.

(b) Sign, Temporary Directional. A temporary off-premises sign that is used to identify the route to an event or activity that is commercial in nature such as bazaars, races, tours and quasi-public fund raising events. Directional Event Signs include such

Deleted: Sign,

Deleted: , on a temporary basis, to a land use or activity

Deleted: Sign,

Deleted: . T

Deleted: . S

Deleted: . A

Deleted: its

Deleted: portable

Deleted: s

Deleted: Sign,

Deleted: Sign,

Deleted: or

Deleted: Sign,

Deleted: permanent sign which is installed inside

Deleted: Event,

Deleted: An

Deleted: placed for a period of time greater than two (2) days

Deleted: temporary

things as marks painted on or along the road surface whether or not approved by the Department of Transportation or County Road Commission.

(2) **Sign, On-Premise Commercial Advertising.** A sign identifying or advertising a commercial business, person, activity, or service located on the premises where the sign is located. Examples of on-premise commercial signs include, but are not limited to, the following:

(a) **Sign, Agricultural Products.** An on-premises sign which indicates the retail sale of agricultural products including those sold at roadside stands and U-Pick operations.

(b) **Sign, Business Center.** A sign which gives direction, name, and identification to a business center and which may include identification of individual businesses within the center.

(c) **Sign, Business Identification.** A sign identifying a business operating on the premises where located.

(d) **Sign, Construction Site.** A sign identifying a construction site.

(e) **Sign, Event.** An on-premises sign placed for a period of time that is used to identify an event that is temporary in nature such as Home Tours, bazaars, races, tours and quasi-public fund raising events.

(f) **Sign, Local Food Production Facility.** An on-premises sign identifying a Local Food Production Facility.

(g) **Sign, Promotional.** A sign that is placed for a limited period of time and is used to advertise a sale, a special event, or similar activity.

(h) **Sign, Real Estate.** A temporary sign advertising the real estate upon which the sign is located as being for lease, sale/auction, or seasonal rent.

(i) **Sign, Roadside Stand.** A sign located on the same premises with a roadside stand which identifies the roadside stand and may also identify products to be sold at the roadside stand.

(j) **Sign, Yard/Garage Sale/Personal Event.** A temporary sign which is placed on the premises of a yard sale, garage sale or on-site events.

(3) **Sign, On-Premise Identification.** A non-electric on-premises identification sign giving name and address of an occupant.

(4) **Sign, On-Premise Safety.** A sign placed to control access to a property such as: "No Hunting", "No Trespassing", or "Private Property".

Deleted: This sign does not include Home Occupation or Bed and Breakfast business.

Deleted: greater than two (2) days

Deleted: Farm Processing

Deleted: Farm Processing

Deleted: (ADDED BY AMENDMENT 174)

Deleted: in a window

Deleted: such as family reunions or weddings

Deleted: Name Plate

Deleted: Private Property/Access Control

Section 11.03 Substitution Clause (NEW SECTION)

Any lawful sign permitted under the provisions of this Ordinance may contain non-commercial content.

Section 11.04 Measurement of Sign Area and Height (currently part of Section 7.11.1)

(A) Sign Area. The area of a sign shall be the minimum area of a parallelogram, ellipse, or circle, or combination of geometric shapes, that is capable of containing the graphics, symbols, and/or written copy along with the background area.

(B) Two or More Sides. A two-sided sign (e.g., V-type sign or double-faced [back-to-back sign]) shall be considered as 1 sign when the angle between the sign faces does not exceed 15 degrees nor does the distance between the backs of each face exceed 3 feet.

(C) Height. Height of signs shall be measured from the highest point of the sign or supporting structure to the elevation of the highest point of grading beneath the sign exclusive of architectural landscaping related to the sign.

Section 11.05 Sign Placement and Design Requirements (currently part of Section 7.11.1)

All signs shall conform with this Article and all other provisions of this Ordinance.

(A) On-Premise Location. All signs shall be located on the same premises as the associated use, unless otherwise provided for in this Ordinance.

(B) Alterations, Repair, and Message Changes. No sign shall be constructed, erected, moved, enlarged, illuminated, or substantially altered unless authorized in accordance with this Ordinance. Repainting or changing the message of a sign in accordance with this Ordinance shall not in and of itself be considered a substantial alteration.

(C) Wall Signs. Wall signs shall meet the following requirements:

(1) The sign does not project more than 12 inches from the building wall;

(2) The exposed face of the sign is in a plane parallel to the building wall or structure; and

(3) The sign does not extend above the height of the building or wall.

(D) Materials. Materials, supports, frames, letters, and sign surfaces may be any commonly used material, however, the use of natural or natural appearing materials is required along M-37 and highly encouraged elsewhere in the township.

(E) Freestanding Sign Width. The sign width, including supporting structures and base, shall not be more than 1.5 times the width of the sign face alone.

(F) Setbacks. Setbacks shall be measured from the lot line to the leading edge of the sign or support structure whichever is less.

Deleted: which

Deleted: one

Deleted: :¶
<#>¶
With respect to a V-type sign,

Deleted: fifteen (

Deleted:)

Deleted: , or;

Deleted: ¶
<#>With respect to double faced (back-to-back) signs, the distance between the backs of each face does not exceed three (3) feet.¶

Deleted: Table 7.11.6

Deleted: ordinance

Deleted: ordinance

Deleted: Signs

Deleted: may be free standing, attached to a building, or installed inside a window, provided, if the sign is attached to a building

Deleted: twelve (

Deleted:)

Deleted: .

Deleted: one and one/half

Deleted: of the road from which the sign will be viewed

(G) Maintenance. Signs shall be properly maintained, including keeping the sign secured and/or anchored, and replacing or repairing materials that are faded, discolored, torn, or deteriorated.

(H) Planning Commission and Zoning Administrator Review. All plans for construction, design, and appearance of signs associated with a development for which site plan review is required shall be reviewed by the Planning Commission as part of the site plan approval process. Changes to existing signs shall be reviewed by the Zoning Administrator in accordance with this Ordinance. In addition to any other consideration, the Planning Commission and/or the Zoning Administrator shall consider the following content-neutral provisions in reviewing and approving signs:

(1) Compatibility of the sign with the character of the neighborhood;

(2) The sign does not unreasonably block views from other properties;

(3) Materials and colors used are natural looking and consistent with surrounding structures in the vicinity, and with the intent of the Ordinance; and

(4) Where the Planning Commission or Zoning Administrator has discretion on the number and location of certain signs, the number and location of signs shall be reasonably necessary to meet the intent of this Ordinance.

(I) Signs approved in association with a Special Use Permit. In approving a Special Use Permit, the Township Board may approve any or all signs allowed in this Ordinance provided that the approved signs meet the following content-neutral provisions:

(1) Are related to an approved use in the Special Use Permit;

(2) The design, size, setback and lighting are shown on a scale drawing;

(3) The number and location of all signs is reasonably necessary to meet the intent of this Ordinance.

Section 11.06 Prohibited Signs (currently Section 7.11.2 and parts of Section 7.11.1)

The following signs shall be prohibited in the township unless explicitly permitted elsewhere in this Ordinance:

(A) Off-premises commercial advertising signs unless explicitly permitted in this Article.

(B) Signs that are illegal under applicable Federal, State, or local laws, regulations and/or ordinance.

(C) Signs that are not clean and in good repair or that have become unsafe or not secure.

(D) Signs that violate the building code or electrical code.

Deleted: permitted in Commercial Districts

Deleted: ¶
<#>¶
<#>All plans for the construction, design and appearance of Entrance Way Signs and Subdivision Development Signs not subject to a Special Use Permit shall be submitted to the Zoning Board of Appeals for review and approval.¶
<#>¶

Deleted: Board of Appeals

Deleted: .

Deleted: .

Deleted: .

Deleted: ordinance

Deleted: NOT

Deleted: allowed

Deleted: any district

Deleted: Signs which do not relate to existing businesses or products

Deleted: which

(E) Signs not securely fastened to a substantial structure.

(F) Signs that interfere with or resemble any official traffic sign, signal, or device, or signs that are deemed hazardous or dangerous by the local road agency or public safety department.

(G) Signs that do not comply with the standards in this Ordinance.

(H) Flashing Signs.

(I) Portable Message Signs or signs utilizing vehicles, trucks, vans, or other wheeled devices.

(J) Roof Signs.

(K) Pennant Signs.

(L) Any sign that revolves, rotates, moves, or is animated.

(M) Signs with automated changes in sign appearance.

(N) Banner Signs, pennants, streamers, festoons, and airborne or air-activated devices attached to the ground or buildings except where otherwise specifically permitted by this Ordinance.

(O) Tripods or sandwich boards

(P) Changeable message boards.

(Q) Wall signs extending perpendicularly from a building wall.

(R) On-site and off-site directional signs except those specifically allowed by this Ordinance.

(S) Signs within a road right-of-way except traffic direction and control signs placed by the County Road Commission or Michigan Department of Transportation.

(T) Signs attached to trees and other vegetation.

(U) Signs attached to utility structures or poles, including light poles, except by the utility company.

(V) Signs located in a Clear Vision Area unless permitted in *Section 7.12*.

(W) Signs attached to street furniture, such as benches and trash cans.

(X) Projected image signs.

Deleted: which attempt or appear to attempt to regulate, warn, or direct the movement of traffic, or which

Deleted: which are not consistent

Deleted: s

Deleted: , p

Deleted: signs

Deleted: Signs

Deleted: , r

Deleted: signs

Deleted: , advertising flags

Deleted: ,

Deleted: ing

Deleted: moving

Deleted:

Deleted: signs, s

Deleted: and all types of b

Deleted: ,

Deleted: , or (unless specifically allowed elsewhere in this Ordinance) c

Deleted: Commercial

Deleted: Directional

Deleted: Signs

Deleted: shall not be

Deleted: shall not be

Deleted: shall not be placed so as to interfere with driver or pedestrian vision at intersections of public roads, private roads, or driveways. In order to not obstruct the view of on-coming traffic from the ingress or egress point of the property, signs, if higher than three (3) feet, shall not be placed within a clear site zone which is a triangle with sides fifteen feet from the beginning of the radius of the entrance way measured along the road providing access to the property and along the access drive fifteen feet from the end of the radius of the entrance way

Section 11.07 Signs Permitted in All Districts (currently Section 7.11.3)

The following signs shall be allowed in all zoning districts (*Section 11.07* and *Section 11.08* may apply):

(A) Memorial/Historical Markers when the site is recognized for its historical significance by a Federal or State agency.

(B) On-Premise Identification Sign (including address signs), which is necessary for public safety and emergency vehicle access.

(C) Official signs of a non-commercial nature erected by a public utility.

(D) On-Premise Safety Signs, such as a Private Property/No Hunting/No Trespassing Sign.

(E) Public notice signs placed by public agencies.

(F) Signs required by law or placed by any governmental agency for traffic control in accordance with the Michigan Manual of Uniform Traffic Control Devices.

(G) Incidental Signs.

(H) Flags or insignia of any governmental or non-profit organization when not displayed in connection with a commercial promotion or as an advertising device.

(I) Signs carried by a person if operating lawfully in a public or private road right-of-way.

Deleted: Name Plate

Deleted: Informational

Deleted: shall not be considered signs

Commented [PS73]: The deleted list of signs is covered in the following section because they are regulated as either permanent or temporary signs. Rather than regulate garage sales signs, construction signs, and other on-site commercial signs, we recommend regulating the length of the use elsewhere in the Zoning Ordinance. This way, the sign is only permitted as long as the on-site commercial use.

Deleted: ¶

<#>Agricultural Products Signs on the same premises with a general farm or horticultural use while the retail outlet is in operation. Signs may be two sided and may have changeable strips identifying specific products or products in season.¶

¶

<#>Church/Non-profit Social Organization/Governmental Sign.¶

¶

<#>Construction Site Sign may be displayed while construction is taking place.¶

¶

<#>Entrance Way Sign.¶

¶

<#>Event Sign and Directional Event Signs are permitted under the following conditions:¶

¶

<#>The event has been approved by the Peninsula Township Board.¶

¶

<#>The specific size, number, location, and duration of placement of the signs has been approved by the Peninsula Township Board.¶

¶

<#>Real Estate Sign while the property is available for rent/lease or sale.¶

¶

<#>Roadside Stand Sign.¶

¶

<#>Subdivision Development Sign.¶

¶

<#>**Yard/Garage Sale Signs.** The on-site sign may not be displayed for more than three (3) consecutive days and not more than ten (10) days in any 365-day period.¶

¶

¶

Section 11.08 Sign Regulations for Specific Zoning Districts (currently Sections 7.11.4 – 7.11.6, including part of Table 7.11.6)

In addition to signs permitted in *Section 11.07*, the following standards apply (all areas are in square feet and all setbacks are from any lot line):

(A) Signs Permitted in All Districts. The following signs are permitted in all zoning districts:

Sign Type	Maximum Number Per Lot	Maximum Area	Maximum Height	Minimum Setback	Illumination	Permit Required?
Temporary On—Premise Commercial Advertising Sign	1	6 sq. ft.	4 ft.	0 ft.	No	No
Temporary Off-Premise Commercial Advertising (limited to 30 days in a calendar year)	1	6 sq. ft.	4 ft.	0 ft.	No	Yes
Temporary Noncommercial Signs	4	24 sq. ft. total	4 ft.	0 ft.	No	No
Ground Monument Entrance Way Sign (Excluding uses located in a Commercial District, single-family dwellings, and two-family dwellings)	1	9 sq. ft.	6 ft.	15 ft.	Yes	Yes
Wall or Marquee/Awning (For the following uses not located in a Commercial District: Institutional Uses, Non-Profit Uses, and Government Uses)	1	30 sq. ft.	N/A	N/A	Yes	Yes
Window Sign	1	3 sq. ft.	N/A	N/A	No	No
Name Plate	1	3 sq. ft.	4 ft. (unless attached to a building)	0 ft.	Yes	No
On-Premise Safety Signs	1 per 100 feet of frontage or portion thereof	1 sq. ft.	6 ft.	0 ft.	No	No
Ingress/Egress Signs	***	2 sq. ft.	3 ft.	0 ft.	***	Yes
Incidental Signs	***	2 sq. ft.	***	***	***	Yes
Interior Directional Sign	***	2 sq. ft.	***	***	***	Yes

***As per approved site plan or plot plan

Commented [PS74]: This replaces the provisions for "Construction Site," "Real Estate," "Yard/Garage Sale," and "Event Sign."

Commented [PS75]: Currently, the Township Board has discretion on temporary event and directional signs. However, this can lead different standards based on the content of the message or the commercial nature of the event taking place. The proposed regulation will make the approval administrative and will treat all off-premise commercial signage equally.

Commented [PS76]: This would include political signs and ideological signs, though the Substitution Clause would allow noncommercial content on any permitted sign. If additional noncommercial signs are desired to allow for more political signs, we would recommend allowing additional signage for 90 days in a calendar year. This way, the regulation would not be tied to an event.

Deleted: For the

Deleted: following

Deleted: not

Commented [PS77]: This replaces the provisions for "Church/Non-Profit/Governmental" and "Entrance Way."

Deleted: : Institutional Uses, Non-Profit Uses, Government Uses, and Residential Developments)

Deleted: Promotional

Deleted: Private Property

Deleted: *

Deleted: Informational

Deleted: ¶

(B) Signs Permitted in Commercial Districts. In addition to the signs permitted in *Section 11.07* and *Section 11.08(A)*, the following signs shall be permitted in the Commercial Districts:

Sign Type	Maximum Number	Maximum Area	Maximum Height	Minimum Setback	Illumination	Permit Required?
Billboards (along M-37 only)	1	30 sq. ft.	10 feet	15 feet	No	Yes
Ground Monument Sign	1	30 sq. ft.	10 feet	15 feet	Yes	Yes
Wall or Marquee/Awning	1	30 sq. ft.	N/A	N/A	Yes	Yes

(C) Signs Permitted in the A-1 Agricultural District. In addition to the signs permitted in *Section 11.07* and *Section 11.08(A)*, the following signs shall be permitted in the A-1 District:

Sign Type	Maximum Number	Maximum Area	Maximum Height	Minimum Setback	Illumination	Permit Required?
Additional Temporary On—Premise Commercial Advertising Sign (Farms, Roadside Stands, Food Processing Plants, and Local Food Production Facilities only)	1	9 sq. ft.	6 ft.	0 ft.	No	No

Section 11.09 Billboards (Permanent Off-Premise Commercial Advertising Signs) (current Section 7.11.1(6), 7.11.1(20), and 7.11.2(12))

(A) **Setbacks.** The support system for billboards is a structure which must meet all setbacks, and requires a lot that meets the area and size requirements for the district in which located.

(B) **Separation Distance.** There shall be a minimum horizontal spacing of 2,000 feet between any 2 billboards including both sides of a highway.

(C) Prohibited Billboards. The following types of billboards shall not be permitted:

(1) A billboard within 500 feet of any residential district, historic district, park, school, church, hospital, retirement home, cemetery, or government building. A billboard located within 500 feet of a residential, commercial, industrial, or agricultural use on the same property.

(2) A billboard that is stacked, tiered, stepped, or placed next to or alongside of any other billboard or sign.

(3) A billboard which would, by its erection, destroy significant natural vegetation and/or cause significant existing vegetation to be removed.

(4) A billboard mounted on or over the roof of a building.

Deleted: the following signs shall be permitted

Deleted: **Business Center (with or without business identification signs)**

Deleted: as per approved site plan

Deleted: **Business Identification Within a Business Center¶**
**

Deleted: **Only¶**
¶
Not in a Business Center

Deleted: **¶**
¶
1

Deleted: **¶**
¶
9 sq. ft.

Deleted: **¶
¶
10 feet

Deleted: **¶
¶
15 feet

Deleted: **¶**
<#>Promotional sign provided it pertains to the business or product on the property and also provided that it is changed at least bi-weekly.¶

Commented [PS78]: The deleted sign for agricultural awards could be covered under allowable temporary noncommercial or commercial signs.

Deleted: The

Commented [PS79]: This allows an additional on-premise commercial sign for these agricultural uses. Currently, Farm Processing Facilities and Roadside stands are permitted 1 sign, and Agricultural Products are permitted 2 signs. We recommend grouping agricultural uses and allowing 1 additional temporary on-premise commercial advertising sign in addition to the 1 permitted in the general standard above.

Deleted: **<#>Signs Not Requiring a Permit.¶**
¶
<#>Areas are in square feet.¶
¶
<#>Setbacks are measured from road rights-of-way that are lot lines, however no signs shall be placed in required side yards that are not road rights-of-way.¶
¶
<#>The following signs do not need a sign permit:¶
Sign Type ...

Deleted: **Wall or Marquee/Awning only¶
***As per approved site plan¶
¶
<#>Such permit shall be preceded by the submission of an application on a form prescribed by the Board of Appeals accompanied with a filing fee. The Board of Appeals shall thereafter hold a hearing on the application, said hearing to be at such time and place and preceded by such notice as the Board of Appeals may determine. If the Board of Appeals shall determine that the granting of the application will not be ...

Deleted: two

(5) Billboards which may otherwise be prohibited by any other laws, ordinances or regulations.

Section 11.10 Illumination and Changeable Copy Standards (currently part of Section 7.14.3(5) and part of Section 7.11.1)

(A) General Lighting. If illumination is allowed by this Ordinance, such illumination shall conform to the requirements of *Section 8.07*.

(B) Hours of Illumination. Illuminated signs must be turned off no more than 1 hour after the close of business and may be turned on no earlier than 1 hour before the opening of business except by special permission granted as a condition of site plan approval and/or special land use approval.

(C) External Illumination. External illumination of signs, including billboards, advertising kiosks, and information boards, shall be mounted at the top of the sign or sign structure and be fully shielded;

(D) Internal Illumination. Internally illuminated signs, billboards, advertising kiosks, and information boards shall have a dark background with lighter-colored translucent (not transparent) lettering, logos, and/or designs. The maximum luminance level of an internally illuminated sign shall not exceed the ambient light at all times, except that the luminance level shall be 700 nits from 30 minutes before dusk until dawn, as determined by the National Oceanic and Atmospheric Association (NOAA). All electronic message center signs and other internally illuminated signs shall be equipped with a photocell and automatic dimmer, and a cut sheet for the sign must be submitted to the Township at the time of permit application showing compliance with these requirements.

Section 11.11 Nonconforming Signs (NEW SECTION)

(A) Removal of Nonconforming Signs. If the owner of a sign or the premises on which a sign is located changes the location of a building, property line or sign, or changes the use of a the land or building so that any sign on the premises is rendered nonconforming, such sign must be removed or made to conform to this Article.

(B) Lawful Existing Signs. Any sign lawfully existing at the time of adoption of this Article which does not fully comply with all provisions shall be considered a legal non-conforming sign and may be permitted to remain as long as the sign is properly maintained, there is no increase in nonconformity, and the sign is not detrimental to the health, safety, and welfare of the community except as hereafter provided.

(C) Continuance. A nonconforming sign shall not be:

(1) Expanded or changed to another nonconforming sign unless the sign is specifically designed for periodic message change.

Deleted: Section 7.14

Deleted: one (

Deleted:)

Deleted: one (

Deleted:)

Commented [PS80]: This is a very low intensity that is still visible in the dark. To enforce, the Township will need a cut sheet from the operator and will need to inspect the sign.

(2) Relocated or structurally altered so as to prolong the life of the sign or so as to change the shape, size, type, placement or design of the sign.

(3) Repaired or re-erected after being damaged if the repair or re-erection of the sign would cost more than 50 percent of the cost of an identical new sign.

(D) **Alteration.** No nonconforming sign shall be altered or reconstructed, unless the alteration or reconstruction be is in compliance with the provisions of this Article. For the purpose of this Article only, the term "altered" or "reconstructed" shall not include normal maintenance; changing of surface sign space to a lesser or equal area, ornamental molding, frames, trellises or ornamental features or landscaping below the base line; or the addition, construction, installation or changing of electrical wiring or electrical devices, backgrounds, letters, figures or characters or other embellishments. Nonconforming signs and sign structures shall be removed or made to conform within 90 days of the termination of the use to which they are accessory.

(E) **Intent.** It is the intent of this Article to encourage eventual elimination of signs that, as a result of the adoption of this Article, become nonconforming and to administer this Article to realize the removal of illegal nonconforming signs and to avoid any unreasonable invasion of established private property.

Section 11.12 Appeals and Variances (currently part of Table 7.11.6)

(A) Any person aggrieved by any decision, ruling or order may make an appeal to the Zoning Board Appeals in accordance with *Section 14.04* of this Ordinance. In addition to meeting the Basic Conditions of Section 14.04(C)(2)(a), variance from the requirements of this Article shall also meet the following conditions that are applicable:

(1) Permitted signage could not be easily seen by passing motorists due to the configuration of existing buildings, trees, or other obstructions, which cannot be legally and/or practically removed.

(2) Permitted signage could not be seen by passing motorists in sufficient time to permit safe deceleration and exit. In determining whether such circumstances exist, the BZA shall consider the width of the road, the number of moving lanes, the volume of traffic, and speed limits.

(3) Existing signs on nearby parcels would substantially reduce the visibility or advertising impact of a conforming sign on the subject parcel.

(4) Construction of a conforming sign would require removal or severe alteration to natural features on the parcel, such as but not limited to: removal of trees, alteration of the natural topography, filling of wetlands, or obstruction of a natural drainage course.

(5) Construction of a conforming sign would obstruct the vision of motorists or otherwise endanger the health or safety of passers-by.

Article 12 Nonconformities

Section 12.01 Intent and Purpose (currently Section 7.5.1)

It is the intent of this Ordinance to allow the continued use of a nonconforming structure and nonconforming uses and to specify those circumstances and conditions under which such nonconformities shall be permitted to continue. It is also the intent of this Ordinance that those nonconformities which adversely affect orderly development and the value of nearby property not be permitted to continue without restriction.

The zoning regulations established by this Ordinance are designed to guide the future use of land by encouraging appropriate groupings of compatible and related uses and thus to promote and protect the public health, safety and general welfare. The continued existence of nonconformities is frequently inconsistent with the purposes of which such regulations are established and thus the gradual elimination of such nonconformities to continue without specific limitation of time but are intended to restrict further investments which would make them more permanent.

Deleted: that the Zoning Board of Appeals may grant a variance to move or reconstruct a non-conforming structure where the structure was legally built on parcels that would be otherwise unbuildable due to overlap in the yard requirements. It is not the intent to allow significant increases in the intensity of previously established residential use on otherwise unbuildable lots. It is not the intent to allow the construction of a residence on a vacant parcel where yard requirements meet or overlap such that there is no buildable area on the parcel

Section 12.02 Nonconforming Lots (NEW SECTION)

Notwithstanding limitations imposed by other provision of this Ordinance, a principal building and customary accessory buildings may be erected on a lot at the effective date of adoption or amendment of this Ordinance. This provision shall apply even though such lot fails to meet the requirements for area or width or both, that are generally applicable in the district; provided that yard setbacks and lot coverage and other requirements not involving area, width, or both, of the lot shall conform to the regulations for the district in which such lot is located. Yard requirement variances may be requested of the Zoning Board of Appeals.

Commented [PS81]: Because the Zoning Ordinance has minimum lot requirements for area and width, there must be provisions for existing lots that do not meet the minimum requirements. "Lot depth" is not included here because there are no minimum lot depth requirements. While lot depth may impact the setback requirements, nonconforming setback requirements are addressed under the section on "Nonconforming Structures."

Section 12.03 Nonconforming Uses (currently part of Section 7.5.1 and Section 7.5.2)

At the discretion of the owner, the lawful use of any building, structure, land or premises existing prior to the effective date of this Ordinance, although the use does not conform to the provisions of this Ordinance, may be continued. However, the legal nonconforming use of any building or land shall not be extended, expanded, or moved to occupy an area of building or land other than what the use lawfully occupied on the effective date of this Ordinance.

Whenever the nonconforming use of any structure or land is changed in whole or in part to a conforming use, such use shall not thereafter be reverted to any nonconforming use. If the nonconforming use of any building, structure or land is discontinued through vacancy, lack of operation or otherwise for a continuous period of 12 months, then any future use of said building, structure, or land shall conform, in its entirety, to the provisions of this Ordinance; provided, however, that the Zoning Board of Appeals may, upon application within 6 months of the termination of said period, permit the resumption of such nonconforming use if the use is resumed within 12 months of the termination of the nonconforming use.

Deleted: ; and such use

Deleted: may

Deleted: throughout such building, provided no structural changes be made therein except those required for safety and sanitation

Deleted: -

Deleted: -

Deleted: -

Deleted: twelve (

Deleted:)

Deleted: six (

Deleted:)

Deleted: -

Section 12.04 Nonconforming Structures (currently Sections 7.5.3 – 7.5.6)

(A) Reconstruction of Damaged Nonconforming Structures (currently Section 7.5.3). Nothing in this Ordinance shall prevent the reconstruction, repair, or restoration and the continued use of any nonconforming building or structure damaged by fire, collapse, explosion, acts of God, or acts of the public enemy, subsequent to the effective date of this Ordinance, wherein the nonconforming user has first obtained the approval of the Zoning Administrator, wherein the Zoning Administrator has first determined that the structure to be reconstructed, repaired, or restored will be substantially the same as the previous nonconforming structure or building, with no vertical or horizontal expansions of any nonconformity. Furthermore, the Zoning Administrator shall only approve reconstruction, repair, or restoration if such reconstruction, repair, or restoration shall not be detrimental to the health, safety and welfare and that substantial justice is achieved.

(B) Repair and Alteration of Nonconforming Structures (currently Section 7.5.4). Nothing in this Ordinance shall prevent the repair, alteration, reinforcement, improvement, or rehabilitation of a nonconforming building or structure or part thereof existing at the effective date of this Ordinance that may be necessary to secure or ensure the continued advantageous use of the building or structure; provided, however, that such repair, alteration, reinforcement, improvement, or rehabilitation proposes no change in the use of said building or structure or any part thereof which results in a vertical or horizontal expansion of any nonconformity.

(C) Additions to Nonconforming Structures (currently Section 7.5.5). The Zoning Administrator shall issue a land use permit for an addition to a lawful nonconforming structure provided all of the following are met:

(1) The addition is not located in any required yard or ordinary high water mark setback; and

(2) In addition to the above yard and ordinary high water mark setback requirements, all other applicable dimensional requirements on the subject parcel shall be satisfied (other than what is lawfully non-conforming).

(D) Moving or Replacing Nonconforming Structures (currently Section 7.5.6). The Township Zoning Board of Appeals may grant a variance for moving or replacing a nonconforming structure so that the continued intensity of conforming use of the lot is substantially the same as in the pre-existing structure, provided all of the requirements *Section 14.04(C)(2)* are met. However, if the moving or replacing of a nonconforming structure will result in the structure becoming conforming with all setback, coverage, area, and height standards of this Ordinance, the Zoning Administrator may approve the moving or replacing of the structure.

Section 12.05 Zoning District Changes (currently Section 7.5.7)

Whenever the boundaries of a district shall be changed so as to transfer an area from one district to another district of another classification, the provisions of this Section shall also apply to any existing uses or structures that become nonconforming as a result of boundary changes.

Deleted: -
Deleted: -
Deleted: Board of Appeals
Deleted: Board of Appeals
Deleted: continued
Deleted: use
Deleted: -
Deleted: use
Deleted: and that
Deleted: continued
Deleted: use
Deleted: will
Deleted: -
Deleted: i
Deleted: (SEE FIGURE 3)
Commented [PS82]: Many of the standards are deleted because they are covered under the Variance provisions of Section 14.104 if there is a change in the nonconformity. Also, the waterfront provision are unnecessary because they are covered under the Waterfront Overlay District regulations with respect to shore cover and shore stabilization.
Deleted: residential
Deleted: on a legal non-conforming lot
Deleted: residential
Deleted: following
Deleted: :
Deleted: <#>The moved or replaced structure is less non-conforming than the previous structure;¶
¶
<#>There is increased safety to the residents of the structure and to the traveling public on the road providing access to the parcel;¶
¶
<#>Safety and substantial justice is achieved;¶
¶
<#>If the variance allows the structure to encroach into the setback from the Ordinary High Water Line, conditions of approval shall include;¶
¶
<#>Provisions for stabilization of the shoreline so that the structure is not likely to be damaged by high water or wave action;¶
¶
<#>There is no additional detriment to adjacent properties;¶
¶
<#>Shoreline vegetation is existing or established consistent with the intent of Section 7.4.4: Removal of Shore Cover; and¶
¶
<#>Sea walls will not be allowed unless it is determined that there is no feasible alternative.¶
¶
...
Deleted: -

Article 13 Administrative Organization

Section 13.01 Zoning Administrator (currently Sections 4.1.1 and 4.1.2)

(A) Description. A Zoning Administrator shall be appointed by and on such terms as shall be determined by the Township Board; provided that the Zoning Administrator shall not be a member of the Township Board, the Planning Commission, or the Board of Appeals. The Zoning Administrator shall perform such duties as the Township Board may prescribe, in addition to any duties prescribed in this Ordinance. To be eligible for appointment, the Zoning Administrator shall be generally informed on good building construction, on good practice in fire prevention, and the proper installation of safety, health and sanitary facilities. The Zoning Administrator shall be capable of fulfilling the duties set forth in this Ordinance. In case the Zoning Administrator has a conflict of interest in the administration or enforcement of this Ordinance, the Township Board shall designate some other person to carry out the duties for which the Zoning Administrator has a conflict of interest. Compensation for the Zoning Administrator shall be established by the Township Board.

(B) Duties. It shall be the duty of the Zoning Administrator to receive applications for land use permits and issue or deny the same; to inspect buildings or structures; to determine compliance with the land use permits issued in compliance with this Ordinance; and to be in charge of the enforcement of this Ordinance. The Zoning Administrator and the Township's Ordinance Enforcement Officer, appointed by the Township Board pursuant to the Ordinance, are hereby authorized to Investigate ordinance violations; serve and issue notice of violations; serve and issue misdemeanor or civil infraction tickets as authorized under State law or Township ordinance; and appear in court or other judicial proceedings to assist in the prosecution of Zoning Ordinance violations.

Deleted: The

Deleted: nor

Deleted: in good health and physically

Deleted: Section 4.1.2

Deleted: is personally interested in the construction of any building subject to

Deleted: provisions

Deleted: code

Deleted: examine the plans, to inspect such building, and to issue the necessary permits, approvals and certificates

Deleted: Enforcement Officer Ordinance

Deleted: appearance

Deleted: Chapter 4 of the Code of Criminal Procedure Act, Public Act 175 of 1927, as amended (MCL 764.9c)

Deleted: Violations

Section 13.02 Township Board (NEW SECTION)

(A) Adoption of Zoning Ordinance and Amendments. In accordance with the intent and purposes of this Ordinance, and pursuant to the authority conferred by the Michigan Zoning Enabling Act, PA 110 of 2006, as amended, the Township Board shall have the authority to adopt this Ordinance, as well as adopt amendments to this Ordinance.

(B) Deciding on Special Land Use Applications. The Township Board shall review and decide on special land use applications pursuant to *Section 14.03*.

(C) Approval of Planning Commission Members. In accordance with the Michigan Planning Enabling Act, Michigan Public Act 33 of 2008, as amended, members of the Planning Commission shall be appointed by the Supervisor with the approval of the Township Board.

(D) Approval of Board of Zoning Appeals Members. In accordance with the Michigan Zoning Enabling Act, Michigan Public Act 110 of 2006, as amended, members of the Board of Zoning Appeals shall be appointed and approved by the Township Board.

(E) Setting of Fees. The Township Board shall have the authority to set all fees for permits, applications, and requests for action pursuant to the regulations set forth in this Ordinance. In the absence of specific action taken by the Township Board to set a fee for a specific permit or application, the appropriate Township administrative official shall assess the fee based on the estimated costs of processing and reviewing the permit or application.

Section 13.03 Planning Commission (NEW SECTION)

(A) In General. The Planning Commission is designated as the commission specified in the Michigan Planning Enabling Act, Public Act 33 of 2008, as amended, and shall perform the duties of such commission as provided in the statute and Peninsula Township Ordinance No. 42, as amended.

(B) Zoning Commission. The Planning Commission is hereby designated as the succeeding body of the Zoning Commission specified in the Michigan Zoning Enabling Act, Public Act 110 of 2006, as amended, and shall perform the duties of said Commission as provided in the statute and Peninsula Township Ordinance No. 42, as amended.

Section 13.04 Zoning Board of Appeals (currently Sections 5.1, 5.2, part of 5.3, and 5.7)

(A) Establishment. There is hereby established a Zoning Board of Appeals in accordance with Act 110 of the Public Acts of Michigan of 2006, as amended. The Board of Appeals shall perform its duties and exercise its powers as provided by the Act, as amended, and in such a way that the objectives of this Ordinance may be equitably achieved; that there shall be provided a means for competent interpretation and controlled flexibility in the application of this Ordinance; that the health, safety and welfare of the public be secured; and that substantial justice be secured.

(B) Membership. There shall be a Board of Appeals which shall consist of 5 members and 2 alternate members appointed by the Township Board. The first member of the Zoning Board of Appeals shall be a member of the Township Planning Commission. The remaining members of the Zoning Board of Appeals shall be selected from the Electors of the township residing outside of incorporated cities and villages. The members selected shall be representative of the population distribution and of the various interests present in the Township. One member may be a member of the Township Board, but shall not serve as chairman of the Zoning Board of Appeals. An employee or contractor of the Township Board shall not serve as a member of the Zoning Board of Appeals.

(C) Compensation. The total amount allowed the Board of Appeals in any 1 year as per diem or as expenses actually incurred in the discharge of their duties shall not exceed a reasonable sum which sum shall be appropriated annually in advance by the Township Board.

Commented [PS83]: Because the Michigan Planning Enabling Act requires an ordinance to establish the Planning Commission (i.e., Peninsula Township Ordinance #42), this section of the Zoning Ordinance is very short because Ordinance #42 already covers requirements for creation, membership, organization (including requiring bylaws), powers and duties, and conflicts of interest

Commented [PS84]: In accordance with the Michigan Planning Enabling Act, Peninsula Township adopted an ordinance in 2010 to formally establish the Planning Commission (Ordinance #42). Therefore, this section of the Zoning Ordinance simply makes reference to that general ordinance.

Commented [PS85]: Unlike the Michigan Planning Enabling Act, which requires a separate ordinance to create the Planning Commission, the Michigan Zoning Enabling Act has no such provisions for a separate ordinance to create the ZBA. Therefore, all of the provisions for establishment, membership, conflicts of interest, powers, and duties are in the Zoning Ordinance. This practice is typical for municipalities in Michigan, so the provisions of the ZBA are longer than those of any other body.

Deleted: 84

Deleted: 1943

Deleted: Sections 18 through 23, of

Deleted: said

Deleted: , **Terms of Office**

Deleted: five

Commented [PS86]: The Michigan Zoning Enabling Act allows for up to 2 alternate members to be appointed. We recommend having 2 alternate members appointed at all times so that applicants have a maximum probability of a 5-member ZBA in the event that regular members cannot attend a meeting or have a conflict of interest.

Deleted: such

Commented [PS87]: The Michigan Zoning Enabling Act requires members to be electors residing outside of incorporated cities and villages. While there are no incorporated cities or villages in Peninsula Township, we recommend keeping this language in the Zoning Ordinance in the unlikely event that an incorporated village or city is ever established in Peninsula Township.

Deleted: . An elected officer of the Township

Deleted: may

Deleted: or an employee

Deleted: Township

Deleted:

Deleted: one

(D) Removal. Members of the Zoning Board of Appeals may be removed by the Township Board for misfeasance, malfeasance, or nonfeasance in office upon written charges and after public hearing.

(E) Conflicts of Interest. A member shall disqualify himself from a vote in which he has a conflict of interest. Failure of a member to disqualify himself from a vote in which he has a conflict of interest shall constitute misfeasance or malfeasance in office.

(F) Terms. The term of each member and alternates shall be for 3 years, except that of the members first appointed, 2 shall serve for 2 years and the remaining members for 3 years. The terms of members serving because of their membership in the Planning Commission or Township Board shall be limited to the time they are members of the Planning Commission or Township Board, respectively. A successor shall be appointed not more than 1 month after the term of the preceding member has expired. All vacancies for unexpired terms shall be filled for the remainder of the term.

(G) Meetings and Powers. Meeting of the Zoning Board of Appeals shall be held at the call of the Chairman and at such other times as the Board in its rules of procedure may specify. The Chairman or in his absence the acting chairman may administer oaths and compel the attendance of witnesses. All meetings of the Board of Appeals shall be open to the public. The Board shall maintain a record of its proceedings which shall be filed in the office of the Township Clerk and shall be a public record. The Board shall not conduct business unless a majority of the members of the Board are present.

(H) Duties; Rules; Hearing and Decision of Appeals; Right to and Grounds of Appeal. The Zoning Board of Appeals shall have the following specified powers and duties, and may fix rules and regulations to govern its procedures:

(1) Interpretation of Zoning Ordinance. The Zoning Board of Appeals shall act upon all questions as they may arise in the administration of this Ordinance, including the interpretation of the Zoning Maps. See *Section 14.04(C)(3).*

(2) Administrative Appeals. The Zoning Board of Appeals shall hear and decide appeals from and review any order, requirements, decision or determination made by the administrative official charged with enforcement of this Ordinance. It shall also hear and decide all matters referred to it or upon which it is required to pass under this Ordinance. Such appeal may be taken by any person aggrieved or by any officer, department, board or bureau of the Township, County or State. The grounds of every determination shall be stated. See *Section 14.04(C)(1).*

(3) Variances. The Zoning Board of Appeals shall have the authority to grant nonuse variances relating to the construction, structural changes, or alteration of buildings or structures related to dimensional requirements of this Ordinance or to any other nonuse-related standard in this Ordinance. See *Section 14.04(C)(2).*

(4) Classifying Uses Not Specifically Mentioned. Pursuant to *Section 14.04(C)(4)*, the Zoning Board of Appeals shall have the power to classify a use which is not specifically mentioned

Commented [PS88]: This sub-section was updated to comply with the removal provisions of the Michigan Zoning Enabling Act, P.A. 110 of 2006.

Deleted:

Deleted: shall

Deleted: removable

Deleted: nonperformance of duty or misconduct

Deleted: /

Deleted: misconduct

Commented [PS89]: The provisions for the terms are revised to comply with the Michigan Zoning Enabling Act.

Deleted: two

Deleted: one

Deleted: , and may fix rules and regulations to govern its procedures sitting as such a Board of Appeals

Deleted: It

along with a comparable permitted, special, or prohibited use for the purpose of clarifying the use regulations in any district.

(I) Limited Duties and Powers. The Zoning Board of Appeals shall not have the power to alter or change the zoning district classification of any property, grant variances from uses of land, nor to make any change in the terms or intent of this Ordinance, but does have power to act on those matters stated in *Section 13.04(H)*. No appeal shall be taken to the Zoning Board of Appeals from a decision of the Planning Commission and/or the Township Board in connection with a special land use.

Deleted: where by statute, or this Ordinance, provision is made for an administrative review, interpretation, variance, exception, or special approval permit as defined therein

(J) Voting. The concurring vote of a majority of the members of the Zoning Board of Appeals shall be necessary to reverse any order, requirement, decision or determination of any administrative official, or to decide in favor of an applicant any matter upon which they are required to pass under this Ordinance.

Article 14 Administrative Procedures

Section 14.01 Permits

(A) Land Use Permits (currently Section 4.1.3).

(1) General. Any individual, corporation, association, officer, department, board, or bureau, including Federal, State, County, or Township governmental entities, planning to erect, change, or move a structure or to establish a new use for any premises in any land use district, shall file an application in writing with the Zoning Administrator for a land use permit. The Zoning Administrator shall issue a "Land Use Permit" if such planned building or structure or mobile home or land use is in compliance with the provisions of this Ordinance. The application shall be on a form prescribed by the Zoning Administrator and approved by the Township Board. The applicant shall furnish permits or approvals from the Grand Traverse County Health Department, the Grand Traverse County Road Commission, the Michigan Department of Environmental Quality, and the Soil Erosion and Sedimentation Control office, and plans which will meet the requirements of the Zoning Ordinance before the Zoning Administrator may issue a permit. Each land use permit shall be issued in triplicate and the copies shall be distributed as follows: 1 to the applicant which he is to retain until construction is completed; 1 to the Township Supervisor; and one to be retained by the Zoning Administrator as a part of the permanent records of the Township. The Zoning Administrator shall promptly inform the applicant of the denial of a "Land Use Permit" if such planned building or structure or land use does not comply with the provisions of this Ordinance.

(2) Evidence of Ownership. All applications for permits under the provisions of this Ordinance shall be accompanied with evidence of ownership of all property affected by the coverage of the permit or written, signed authorization from the property owner(s).

(3) Property Boundaries. The Zoning Administrator shall require property boundaries to be located and marked by a registered land surveyor. In case of properties located along a shoreline, if there is any question of location of the "Ordinary High Water Mark", the Zoning Administrator shall also require this level to be set and marked by a registered land surveyor.

(4) Voiding of Permit. Any permit granted under this section shall become null and void after 1 year from the date of granting such permit unless the development proposed shall have passed its first building inspection. Before voidance is actually declared, the Zoning Administrator shall notify the applicant of such voiding action by sending a notice by certified mail to the applicant at the address indicated on the permit application.

(5) Inspection. The development or usage proposed by a zoning permit shall be subject to 2 inspections; the first prior to the issuance of a building permit, and the second when the building is completed. The Zoning Administrator may require an additional inspections,

Deleted: of the
Deleted: to the extent of more than twenty five (25) square feet of floor area
Deleted: Said
Deleted: the
Deleted: - Leelanau Benzie District
Deleted: The
Deleted: Natural Resources
Deleted: Grand Traverse County Soil Conservation District
Deleted: Section 7.2.5 of
Deleted: one
Deleted: one
Deleted: ordinary
Deleted: high
Deleted: water
Deleted: mark
Deleted: one (
Deleted:)
Deleted: two (
Deleted:)
Deleted: ,

such as an inspection of the excavated footings and foundations before concrete is poured. It shall be the duty of the permit holder to notify the Zoning Administrator regarding the time that construction will be ready for inspection. Failure of the permit holder to make proper requests for inspection shall automatically cancel the permit, requiring the issuance of a new permit before occupancy may be permitted.

(B) Fees (currently Section 4.1.4). The fees for land use permits shall be established by the Township Board. Fees for inspection and the issuance of permits or certificates required under this Ordinance shall be collected by the Zoning Administrator in advance of issuance. The amount of such fees is shown in the schedule of fees established by the Township Board and shall cover the cost of inspection and supervision resulting from the enforcement of this Ordinance.

(C) Completion (currently Section 6.2.6). Any dwelling, accessory building or addition thereto must be completed on the exterior surface with a suitable finishing material including painting or staining in the case of wood, within 2 years from date of issuance of the land permit and prior to its occupancy.

(D) Prior Building Permits (currently Section 7.1.1). Any building permit issued prior to the effective date of this Ordinance shall be valid, in accordance with its terms, even though not conforming to provisions of this Ordinance, provided that construction is commenced within 12 months after the date of permit issuance and that the entire building shall be completed according to the plans filed with the permit application within 18 months after issuance of building permit.

Deleted: may

Deleted: two (

Deleted:)

Deleted: twelve (

Deleted:)

Deleted: one and one-half (1-1/2)

Deleted: years

Section 14.02 Site Plan Review

(A) Uses Requiring Site Plan Review (NEW SECTION). In the case of minor projects such as remodeling or re-occupancy, site plan review procedures may be modified, at the discretion of the Planning Director, to provide an administrative review by Township staff in lieu of a more formal review by the Planning Commission. Administrative review procedures are not intended to modify any Ordinance, regulation, or development standard. If, in the opinion of the Planning Director, the scope of an Administrative Review application is beyond the intent below, the Planning Director may defer to the Planning Commission or require Site Plan Review.

Development Activity	Site Plan Review	Administrative Review
(1) All uses except single-family and two-family residences in the R-1A, R-1B, R-1C, and R-1D zoning districts, and their customary permitted and accessory uses.	✓	
(2) All uses except single-family and two-family residences in the A-1 zoning district, and their customary permitted and accessory uses and farm buildings and operations.	✓	
(3) All uses in the C-1 Zoning District	✓	
(4) Any use or development involving a special land use	✓	
(5) Re-occupancy of a building, provided all of the following are true: • No variances to the Ordinance are required; • Such use is conducted within a completely enclosed building; • Re occupancy does not create additional parking demands; and • Re occupancy does not substantially alter the character of the site.		✓
(6) Remodeling or construction of an addition to an existing building or use, provided all of the following are true: • No variances to the Ordinance are required; and • The proposed new construction would be interior only and would not increase the total square footage of the building.		✓
(7) Co-location of Wireless Communication Facilities (see *Section 6.41*)		✓
(8) Wireless Communication Facilities or replacement of an existing wireless communication support structure (see *Section 6.41*)	✓	

(B) Required Information (currently part of Section 6.9.4.1, Section 6.9.4.2, Section 7.14.4, Section 8.4.6, and Section 8.7.3(4) (b) and (c)). The information in the following table shall be required for all applications for site plan review. The Planning Commission reserves the right to exempt any information which is at their discretion not relevant to a particular site.

Required Information
(1) Site Plan Drawing Information
(a) Copies of site plan drawing on 24-inch x 36-inch paper
(b) Scale of no less than 1 inch to 100 feet
(c) Map of the entire site and any future phases of development
(d) Location map showing the site in context with the surrounding area
(e) Date of most recent revisions
(f) North arrow
(g) Contours at 5-foot intervals where slope greater than 10 percent, or
(h) Contours at 2-foot intervals where slope is 10 percent or less
(2) Application Information
(a) Name of project or development
(b) Name and contact information of property owner
(c) Name and contact information of the applicant, including the applicant's interest in the development
(d) Name and contact information of person preparing site plan
(e) Project location including address and Township and County names
(f) Legal description of the property matching the survey
(g) Copies of documents including covenants, by-laws, and master deeds
(3) Planning and Site Improvement Information
(a) Description of existing land use and zoning of the site
(b) Area and dimensions of site
(c) Location, type, dimensions, and use of all existing and proposed structures
(d) Lot lines and number of units
(e) Elevation plans, floor plans, and building materials for all proposed structures
(f) Existing land use, zoning, and property owners of adjacent lots
(g) Description of intended land use
(h) Description and location of any areas intended for public use
(i) Right-of-way easements, showing location, width, and purpose
(j) Locations, descriptions, and cut sheets of all illuminating devices, fixtures, lamps, supports, and reflectors
(k) A photometric plan superimposed on the site plan
(l) Location, size, and surface materials for all paved areas on the site
(m) Proposed interior vehicular and pedestrian circulation patterns
(n) A statement of deed restrictions
(4) Engineering Information
(a) Copies of engineering plans and specifications on 24-inch x 36-inch paper
(b) Location of water and sewer lines and riser pipes
(c) Plans/specifications of water supply, sewage disposal and refuse facilities
(d) Locations and details of lighting, electric, and gas systems
(e) Proposed and existing storm sewers, sanitary sewers, and water mains
(5) Environmental Information
(a) Locations and information for all wetlands on the property. The Township may require a formal determination by the Michigan Department of Environmental Quality
(b) Locations and information of existing natural features and soil types

Deleted: %,

Deleted: %

Required Information	
(c) The location and types of all significant existing vegetation, water courses and bodies, floodplains, and water retention areas	
(d) Location of all drainage easements that comply with the requirements of the Peninsula Township Storm Water Control Ordinance.	
(e) Details on solid waste removal including dumpster and screening methods	
(f) A landscape plan that meets the requirements of *Article 10*	
(6) Other Information	
(a) Any other information deemed necessary by the Planning Commission	

(C) Site Plan Review Procedures (currently part of Section 6.9.5.3).

(1) The Planning Commission shall review the site plan and the reports of the County Road Commission, the County Drain Commissioner/Soil Erosion Officer, County Health Department, and County Planning Commission, Township Engineer, and Planning Director.

(2) If following the review of the site plan prescribed above, the Planning Commission determines that the proposed plan meets all requirements of this Ordinance, the Planning Commission shall approve the plan and may apply conditions to ensure the requirements of this Ordinance are met.

(3) If the site plan does not meet all of the requirements of this Ordinance, the Planning Commission shall deny the site plan, it shall state its reason(s) for denial in its official minutes.

(D) Duration of Approval (currently Section 6.9.6.2). Approval of the site plan by the Planning Commission shall be for a period of 1 year from the date of its approval by the Planning Commission. Within the 1 year approval period, construction shall commence and the applicant shall make progress toward completion in accordance with the approved schedule and permit. The Planning Commission may extend the 1 year period if applied for and granted in writing but only concerning its own requirements.

(E) Performance Guarantees (NEW SECTION). After approval of a site plan, but before construction, a performance guarantee shall be posted in accordance with *Section 7.02*.

Deleted: and public hearing

Deleted: send notice of action taken with comments to the Township Board

Deleted: condominium subdivision

Deleted: recommend disapproval of

Deleted: by the Township Board

Deleted: and forward same to the Township Board, and recommend that the Township Board disapprove the condominium subdivision plan until the objections causing disapproval have been changed to meet with the approval of the Planning Commission

Deleted: ¶
<#>¶
Condominium Subdivision.

Deleted: condominium subdivision

Deleted: Township Board

Deleted: one

Deleted: Township Board

Deleted: Township Board

Deleted: one

Section 14.03 Special Land Use Review

(A) **Intent and Purpose (currently Section 8.1.1).** Rather than permitting all of the many and varied land use activities within individual and limited zoning districts, it is the intent of this Ordinance to provide a set of procedures and standards for specific uses of land or structures that will allow, on one hand practical latitude for the investor or developer, but that will at the same time, maintain sound provisions for the protection of the health, safety, convenience, and general welfare of Township inhabitants. In order to provide controllable and reasonable flexibility, this Article permits detailed review of certain specified types of land use activities which, because of their particular and unique characteristics may be authorized within certain zone districts by the issuance of a special use permit. By such a procedure, safeguards upon each use which are deemed necessary for the protection of the public welfare, may be reviewed and the standards set forth within the Ordinance shall be considered and determined by the Township Board upon recommendation by the Planning Commission before issuing such special use permits.

The following Sections, together with previous references in other Articles and Sections of this Ordinance, designate specific uses that require a special use permit and in addition, specify the procedures and standards which must be met before such permit can be issued.

(B) **Authorization (currently Section 8.7.1).** Because of particular functional and other inherent characteristics, certain land and structure uses have a high potential of being injurious to surrounding properties by depreciating the quality and value of such property. Many of these uses may also be injurious to the Township as a whole unless they are controlled by minimum standards of construction and operation. It is the intent of this Section to provide a framework of regulatory standards which can be utilized by the Township Board as a basis for approving or disapproving certain special uses which may be permitted by the issuance of a special use permit within the particular zone districts cited.

(C) **Site Development Requirements (currently part of Section 8.7.3).** A special use permit shall not be issued for the occupancy or use of a structure or parcel of land, or for the erection, reconstruction or alteration of a structure unless complying with the following site development requirements.

(D) **Special Land Use Review Procedures (currently part of 6.9.5.3, part of Section 6.9.5.4, and Section 8.1.2).** An application for a special use permit for any land or structure use permitted under this Article shall be submitted and processed under the following procedures:

(1) **Submission of Application.** Any application shall be submitted through the Zoning Administrator on a special form for that purpose. Each application shall be accompanied by the payment of a fee as established by the Township Board to cover costs of processing the application. No part of any fee shall be refundable.

(2) **Data Required.** Every application shall be accompanied by the following information and data:

(a) The special form supplied by the Township Zoning Administrator filled out in full by the applicant, including a statement of supporting evidence showing compliance with the requirements of *Section 14.03(D)(3)*,

(b) Site plan pursuant to *Section 14.02(B)*.

(c) Preliminary plans and specifications of the proposed development.

(3) Township Board and Planning Commission Actions.

(a) The application along with all required data shall be transmitted to the Township Board for consideration after referral to a study by the Planning Commission.

(b) The Planning Commission shall hold a public hearing on the application pursuant to *Section 14.06*.

(c) Upon receipt of a recommendation from the Planning Commission, the Township Board may hold a public hearing pursuant to *Section 14.06*.

(d) Final Approval & Conditions.

(i) **Findings.** Final approval by the Township Board shall be preceded by a finding and determination with respect to compliance with the regulations set forth in *Section 14.03(E)*,

(ii) **Applicable Conditions.** Reasonable conditions may be required pursuant to *Section 14.03(E)(2)* with the approval of a special use permit, to the extent authorized by law, for the purpose of ensuring that public services and facilities affected by a proposed land use or activity will be capable of accommodating increased services and facility loads caused by the land use or activity, protecting the natural environment and conserving natural resources and energy, ensuring compatibility with adjacent uses of land, and promoting the use of land in a socially and economically desirable manner.

(iii) **Purpose of Conditions.** Conditions imposed shall be designed to protect natural resources and the public health, safety and welfare of individuals in the project and those immediately adjacent, and the community as a whole, shall be reasonably related to the purpose affected by the special use permit, and shall be necessary to meet the intent and purpose of this Ordinance, and be related to the objective of ensuring compliance with the standards of this Ordinance. All conditions imposed shall be made a part of the record of the approved special use permit.

(4) Phasing.

(a) Where a project is proposed for development in phases, the planning and designing shall be such that, upon completion, each phase shall be capable of standing on its own in terms of the presence of services, facilities, and open space, and shall contain

Deleted: Section 8.1.3

Deleted: , plot plan, development plan, drawn to scale (preferable 1"=50'), of total property involved showing the location of all abutting streets, the location of all existing and proposed structures and their uses, and the location and extent of all above ground development, both existing and proposed

Deleted: may

Deleted: shall

Deleted: publish in a newspaper having a general circulation in the Township, one (1) notice that a request for special land use approval has been received.¶
¶
The content of the notice shall describe the nature of the special land use request, indicate the property which is the subject of the special land use request, state when and where the special land use request will be considered, indicate when and where written comments will be received concerning the request, and indicate that a public hearing on the special land use request may be requested by the property owner or the occupant of any structure located within three hundred (300) feet of the boundary of the property being considered for a special use.¶
¶
The notice shall be given not less than five (5) nor more than fifteen (15) days before the date the application will be considered.¶
¶
The notice shall be delivered personally or by mail to the owners of property for which approval is being considered, all persons to whom real property is assessed within three hundred (300) feet of the boundary in question, and the occupants of all structures within three hundred (300) feet of the boundary of the property in question. If the name of the occupant is not known, the term "occupant" may be used in making notification. Notification need not be given to more than one (1) occupant of a structure; except that, if a structure contains more than one (1) dwelling unit or spatial area owned or leased by different individuals, partnerships, businesses, or organization, one (1) occupant of each unit or spatial area shall receive notice. In the case of a single structure containing more than four (4) dwelling units or other distinct spatial areas owned or leased by different individuals, partnerships, businesses, or organizations, notice may be given to the manager or owner of the structure who shall be requested to post the notice at the primary entrance to the structure.¶
¶
A public hearing on a special land use request shall be held by the Township Board if:¶
¶
A public hearing is requested by the Township Board, the applicant for special land use authorization, a property owner, or the occupant of a structure located within three hundred (300) feet of the boundary of the property being considered for a special land use.¶
¶
The decision on the special land use request is based on discretionary grounds.¶
¶
...

Deleted: this Article

Deleted: insuring

Deleted: insuring

Deleted: insuring

the necessary components to insure protection of natural resources and the health, safety, and welfare of the users of the project and the residents of the surrounding area.

(b) The Township Board shall approve the final project for one phase at a time.

(5) Commencement and Completion.

(a) **Special Use Permits Not Involving Construction.** For special use permits not involving construction, a land use permit for the use shall be acquired within 1 year following final approval of the special use permit, or within 1 year of the schedule established for the project in the approved special use permit whichever is later.

If a land use permit is not received within such time, any approval of the special use shall expire and be null and void, provided, an extension for a specified period may be granted by the Township Board upon good cause shown if such request is made to the Township Board prior to the expiration of the initial period.

(b) **Special Use Permits Involving Construction.** For special use permits involving construction, such construction shall be commenced within 1 year following final approval of the special use permit, or within 1 year of the schedule established for the project in the approved special use permit whichever is later.

If such construction is not commenced within such time, any approval of the final plan for the project shall expire and be null and void, provided, an extension for a specified period may be granted by the Township Board upon good cause shown if such request is made to the Township Board prior to the expiration of the initial period.

(c) **Phased Development.** Each phase of the project shall be commenced within 1 year of the schedule established for the project phase in the approved special use permit.

(d) **Occupancy Permit.** An occupancy permit shall be received within 1 year of approval of a land use permit for any construction authorized by special use permit.

If an occupancy permit is not received within such time, any approval of the final plan for the project shall expire and be null and void, provided, an extension for a specified period may be granted by the Township Board upon good cause shown if such request is made to the Township Board prior to the expiration of the initial period.

(e) **Expiration.** In the event a final plan has expired, a new application shall be required, and shall be reviewed in light of the then existing and applicable law and ordinance provisions.

(6) Effect of Approval. If and when approved, the special use permit, with all conditions imposed, if any, shall constitute the land use authorization for the property, and all improvement and use shall be in conformity with such amendment.

Deleted: one

Deleted: one

Deleted: one

Deleted: one

Moved (insertion) [1]

Deleted: For special use permits involving construction, i

Deleted: one

Deleted:

Moved up [1]: For special use permits involving construction, if such construction is not commenced within such time, any approval of the final plan for the project shall expire and be null and void, provided, an extension for a specified period may be granted by the Township Board upon good cause shown if such request is made to the Township Board prior to the expiration of the initial period.

Deleted: ¶
<#>¶

Deleted: one

(E) Basis for Determination (currently Section 8.1.3). Before making a recommendation or decision on a special use permit application, the Planning Commission and Township Board shall apply the following general standards, as well as the specific standards outlined in each section of this Article.

Deleted: establish that

Deleted: , shall be satisfied

(1) General Standards. The Planning Commission and Township Board shall review each application for the purpose of determining that each proposed use meets the following standards, and in addition, shall find adequate evidence that each use on the proposed location will:

(a) Be designed, constructed, operated and maintained so as to be harmonious and appropriate in appearance with the existing or intended character of the general vicinity and zoning districts and that such a use will not change the essential character of the area in which it is proposed.

(b) Not be hazardous or disturbing to existing or future uses in the same general vicinity and will be a substantial improvement to property in the immediate vicinity and to the community as a whole.

(c) Be served adequately by essential facilities and services, such as highways, streets, police, fire protection, drainage structures, refuse disposal, water and sewage facilities, or schools.

(d) Not create excessive additional requirements at public cost for public facilities and services.

(e) Not involve uses, activities, processes, materials, and equipment or conditions of operation that will be detrimental to any persons, property, or the general welfare by fumes, glare or odors.

(f) Not conflict with the policy goals and actions of the Peninsula Township Master Plan.

(2) Conditions and Safeguards. The Township Board may impose such additional conditions and safeguards deemed necessary for the general welfare, for the protection of individual property rights, and for insuring that the intent and objectives of this Ordinance will be observed. The breach of any condition, safeguard or requirement shall automatically invalidate the permit granted.

(3) Specific Requirements. In reviewing the impact of the special land use and site plan, the Township Board and the Planning Commission shall consider the following standards:

Deleted: an impact assessment

(a) That the applicant may legally apply for site plan review.

(b) That all required information has been provided in accordance with this Ordinance.

(c) That the proposed development conforms to all regulations of the zoning district in which it is located.

(d) That the plan meets the requirements of Peninsula Township for fire and police protection, water supply, sewage disposal or treatment, storm drainage and other public facilities and services.

(e) That the plan meets the standards of other governmental agencies where applicable, and that the approval of these agencies has been obtained or is assured.

(f) That natural resources will be preserved to a maximum feasible extent, and that areas to be left undisturbed during construction shall be so located on the site plan and at the site per se.

(g) That the proposed development property respects flood ways and floodplains on or in the vicinity of the subject property.

Deleted:

(h) That the soil conditions are suitable for excavation and site preparation, and that organic, wet or other soils which are not suitable for development will either be undisturbed or modified in an acceptable manner.

(i) That the proposed development will not cause soil erosion or sedimentation problems.

(j) That the drainage plan for the proposed development is adequate to handle anticipated stormwater runoff, and will not cause undue runoff onto neighboring property or overloading of water courses in the area.

(k) That grading or filling will not destroy the character of the property or the surrounding area, and will not adversely affect the adjacent or neighboring properties.

(l) That structures, landscaping, landfills or other land uses will not disrupt air drainage systems necessary for agricultural uses.

(m) That phases of development are in a logical sequence, so that any one phase will not depend upon a subsequent phase for adequate access, public utility service, drainage, or erosion control.

(n) That the plan provides for the proper expansion of existing facilities such as public streets, drainage systems and water sewage facilities.

(o) That landscaping, fences or walls may be required by the Township Board and Planning Commission in pursuance of the objectives of this Ordinance.

(p) That parking layout will not adversely affect the flow of traffic within the site, or to and from the adjacent streets.

(q) That vehicular and pedestrian traffic within the site, and in relation to streets and sidewalks serving the site, shall be safe and convenient.

(r) That outdoor storage of garbage and refuse is contained, screened from view and located so as not to be a nuisance to the subject property or neighboring properties.

(s) That the proposed site is in accord with the spirit and purpose of this Ordinance and not inconsistent with, or contrary to, the objectives sought to be accomplished by this Ordinance and the principles of sound planning.

(F) **Revocation (currently part of Section 8.7.3).** Without limiting the powers of the Township Board in any other Section of this Ordinance, the Township Board shall have the authority to revoke any special use permit when, after reasonable warning, the operator of any use permitted under this Section fail to comply with any of the requirements stipulated. In addition, the Township Board may, to prevent injury or damage to adjoining properties which may impair public health, welfare or safety, require additional conditions and safeguards.

Section 14.04 Variances and Appeals

(A) Right to and Grounds of Variance or Appeal (currently part of Section 5.3). Appeals and variance requests may be taken to the Zoning Board of Appeals pursuant to *Section 13.04(H).*

(B) Appeal and Notice Requirements (currently Section 5.4, Section 5.5, and Section 5.6).

(1) Time to and Notice of Appeal; Transmission of Record. Such appeal shall be taken within 30 days by the filing with the Zoning Administrator or other officer from whom the appeal is taken and with the Board of Appeals of a notice of appeal specifying the grounds thereof. The officer from whom the appeal is taken shall forthwith transmit to the Board of Appeals all the papers constituting the record upon which the action appealed was taken.

(2) Stay of Proceedings Pending Appeal. An appeal stays all proceedings in furtherance of the action appealed from unless the officer from whom the appeal is taken certifies to the Board of Appeals after the notice of appeals shall have been filed with him that by reason of facts stated in the certificate, a stay would cause imminent peril to life or property, in which case proceedings shall not be stayed otherwise than by a restraining order which may be granted by the Board of Appeals or by the Circuit Court on application, on notice to the officer from whom the appeal is taken and on due cause shown.

(3) Hearings and Notices; Right to be Heard; Disposition of Appeals; Decision Final. The Board of Appeals shall fix a reasonable time for the hearing of the appeal and give due notice thereof in accordance with *Section 14.06*. Upon the hearing, any party may appear in person or by agent or by attorney. The Board of Appeals shall make its decisions in accordance with this *Section 14.04* so that the spirit of the Ordinance shall be observed, public safety secured and substantial justice done. The decision of the Board of Appeals shall be final, and any person aggrieved by a decision of the Zoning Board of Appeals shall have the right to appeal to the Circuit Court within 30 days after the Zoning Board of Appeals issues its decision in writing signed by the chairperson.

(C) Duties and Powers.

(1) Appeals (currently Section 5.7.1). The Zoning Board of Appeals shall hear and decide appeals where it is alleged by the appellant that there is an error in any order, requirement, permit, decision or refusal made by the Zoning Administrator or by any other official in administering or enforcing any provisions of this Ordinance.

(2) Variances (currently Section 5.7.3(1) and (2) and Section 5.7.3(4)). The Zoning Board of Appeals shall have the power to authorize, upon an appeal, specific variances from such requirements as lot area and width regulations, building height and bulk regulations, yard and depth regulations, and off-street parking and loading space requirements, provided all of the basic conditions listed herein, ,as well as any other applicable conditions, can be satisfied.

(a) Basic Conditions.

Deleted: such time as shall be prescribed by the Board of Appeals by general rule,

Deleted: not

Deleted: to the parties and decide the same within a reasonable time

Deleted: may reverse or affirm wholly or partly, or may modify the order, requirement, decision or determination as in its opinion ought to be made in the premises. Where there are practical difficulties or unnecessary hardship in the way of carrying out the strict letter of such Ordinance, the Board of Appeals shall have the power in passing upon appeals to vary or modify any of its rules, regulations or provisions

Deleted: not

Deleted: having an interest affected

Deleted: this Ordinance

Deleted: . PROVIDED

(i) That the need for the variance is due to unique circumstances or physical conditions, such as narrowness, shallowness, shape, water or topography, of the property involved and that the practical difficulty is not due to the applicant's personal or economic hardship.

(ii) That the need for the variance is not the result of actions of the property owner (self-created) or previous property owners.

(iii) That strict compliance with area, setback, frontage, height, bulk, density or other dimension requirement will unreasonably prevent the property owner from using the property for a permitted purpose, or will render conformity with those regulations unnecessarily burdensome. (Because a property owner may incur additional costs in complying with this ordinance does not automatically make compliance unnecessarily burdensome.)

(iv) That the variance will do substantial justice to the applicant as well as to other property owners in the district, or whether a lesser relaxation than applied for would give substantial relief to the owner of the property involved and be more consistent with justice to other property owners.

(v) That the variance will not cause adverse impacts on surrounding property, property values or the use and enjoyment of property in the neighborhood.

(vi) That the variance shall not permit the establishment within a district of any use which is not permitted by right, or any use for which a conditional use or temporary use permit is required.

(b) Rules. The following rules shall be applied in the granting of variances:

(i) The Board of Appeals may specify, in writing, such conditions regarding the character, location, and other features that will in its judgement, secure the objectives and purposes of this Ordinance. The breach of any such condition shall automatically invalidate the permit granted.

(ii) Each variance granted under the provisions of this Ordinance shall become null and void unless: The construction authorized by such variance or permit has been commenced within 6 months after the granting of the variance; and the occupancy of the land, premises, or buildings authorized by the variance has taken place within 1 year after the granting of the variance.

(iii) No application for a variance which has been denied wholly or in part by the Board of Appeals shall be resubmitted for a period of 1 year from the date of the last denial, except on grounds of newly discovered evidence or proof of changed conditions found upon inspection by the Board of Appeals to be valid.

(c) Additional Conditions in Determining Variances for Decks or Deck with Attached Seating and/or Attached Storage within the Great Lakes Ordinary High Water Mark Setback. In determining whether to grant a variance permitting construction of a

deck or of a deck with attached seating and or attached storage within the ordinary high water mark setback, the Board of Appeals shall, in addition to considering Basic and Special Conditions established by this Ordinance, consider the following conditions:

(i) The physical characteristics of the waterfront property which may require the construction of a deck to make use of that property.

(ii) The proximity of the proposed structure to the main traveled portion of the roadway so as to ensure the safety of users and/or property.

(iii) The extent to which the proposed structure will obstruct the public view of the shoreline.

(iv) The degree of exposure of the structure to damage by the elements.

(v) The aesthetics of the structure as viewed from both the land and the water.

(d) **Prohibited Variances (NEW).** No appeal shall be taken to the Zoning Board of Appeals from a decision of the Planning Commission and/or the Township Board in connection with a special land use. Also, the Zoning Board of Appeals shall not grant variances from uses of land.

(3) Interpretations (currently Section 5.7.2). The Zoning Board of Appeals shall have the power to:

(a) Interpret, upon request, the provisions of this Ordinance in such a way as to carry out the intent and purpose of this Ordinance.

(b) Determine the precise location of the boundary lines between zoning districts, using guidance provided in *Section 3.03*.

(4) Classifying Uses Not Specifically Mentioned (currently 6.1.4(2)). The Board of Appeals shall have the power to classify a use which is not specifically mentioned along with a comparable permitted, special, or prohibited use for the purpose of clarifying the use regulations in any district.

(D) Attachment of Conditions (currently Section 5.7.3(3)(a)). The Board may specify, in writing, such conditions regarding the character, location, and other features that will in its judgment, secure the objectives and purposes of this Ordinance. The breach of any such condition shall automatically invalidate the permit granted.

(E) Approval Period (currently Section 5.7.3(3)(b)). Each variance granted under the provisions of this Ordinance shall become null and Void unless: The construction authorized by such variance or permit has been commenced within 6 months after the granting of the variance; and the occupancy of land, premises, or buildings authorized by the variance has taken place within 1 year after the granting of the variance.

Deleted: insure

Deleted: ¶
<#>Classify a use which is not specifically mentioned as part of the use regulations of any zoning district so that it conforms to a comparable permitted or prohibited use, in accordance with the purpose and intent of each district.¶

Commented [PS90]: This also includes the same provisions that are currently in Section 5.7.2(3).

Deleted: six (

Deleted:)

Deleted: one (

Deleted:)

(F) Re-Application (currently Section 5.7.3(3)(c)). No application for a variance which has been denied wholly or in part by the Board shall be resubmitted for a period of 1 year from the date of the last denial, except on the grounds of newly discovered evidence or proof of changed conditions found upon inspection by the Board to be valid.

(G) Performance Guarantees (currently Section 5.9). In authorizing any variance, or in granting any other approvals, the Township Board of Appeals may require that a performance guarantee pursuant to *Section 7.02* be furnished to ensure compliance with the requirements, specifications and conditions imposed with the grant of variance or other approval and to ensure the discontinuance of a structure or activity by a stipulated time.

Deleted: one (

Deleted:)

Deleted: conditional, temporary or special approval permits

Deleted: bond

Deleted: insure

Deleted: permit

Deleted: insure

Deleted: a temporary use

Section 14.05 Amendments (currently Article 9)

(A) Initiation of Amendments (NEW SECTION). The Township Board may amend, supplement or change the regulations or the district boundaries of this Ordinance pursuant to the authority and according to the procedure set forth in Act 110, of the Public Acts of 2006, as amended. Text amendments may be proposed by the Township Board, Planning Commission, or any interested person or organization. Changes in zoning district boundaries may be proposed by the Township Board, Planning Commission, any person having a freehold interest in the premises concerned, or by the designated agent of a person having a freehold interest in the property.

Deleted: Any person affected by this Ordinance may submit a request in writing to the Secretary of the Township Zoning Board asking that consideration be given to a specific amendment to this Ordinance in the particulars set forth in the request. The Zoning Board shall thereafter hold a meeting to consider said petition and shall notify the petitioner of the time and place of such meeting not less than ten (10) days prior thereto.

(B) Application for Amendment (NEW SECTION). An application for an amendment to the text of this Ordinance or an amendment to change the zoning classification of a particular property shall be commenced by filing an application with the Planning Director on the forms provided by the Township, and accompanied by the fees specified. The application shall describe the proposed amendment and shall be signed by the applicant. Applications for rezoning of a specific site shall be accompanied by a plot plan or survey which specifies the boundaries and legal description of the site. The Planning Director, Planning Commission, and Township Board may request additional information with the application.

(C) Amendment Review Procedures (NEW SECTION). The amendment, be it a text or a map amendment, and application materials shall be prepared in accordance with the provisions of this Section, and shall be reviewed in accordance with the following procedure. Amendments or application materials that do not meet the stipulated requirements shall be considered incomplete and shall not be eligible for consideration by the Planning Commission:

(1) Technical Review. Prior to Planning Commission consideration, the proposed amendment and application materials shall be distributed to appropriate Township officials and staff for review and comment. The proposed amendment and application materials may also be distributed to applicable outside agencies and designated Township consultants for review.

(2) Public Hearing. A public hearing shall be held for all proposed amendments in accordance with the procedures set forth in the Michigan Zoning Enabling Act, PA 110 of 2006 (as amended) as summarized in *Section 14.06*.

(3) Planning Commission Consideration of the Proposed Amendment. The Planning Commission shall review the proposed amendment, together with any reports and recommendations from staff, consultants, other reviewing agencies and any public comments. The Planning Commission shall identify and evaluate all factors relevant to the petition, including the appropriate criteria listed in this Section, and shall report its findings and recommendation to the Township Board.

(4) Township Board Action on the Proposed Amendment. Upon receipt of the report and recommendation from the Planning Commission, the Township Board may approve or deny the proposed amendment. If determined to be necessary, the Township Board may refer the amendment back to the Planning Commission for further consideration. In the

case of an amendment to the official Zoning Map, the Township Board shall approve or deny the amendment, based upon its consideration of the criteria contained herein.

(D) **Standards of Review for Amendments (NEW SECTION).** In considering any petition for an amendment to the text of this Ordinance or to the Zoning Map, the Planning Commission and Township Board shall consider the following criteria that apply to the application in making findings, recommendations, and a decision. The Planning Commission and Township Board may also take into account other factors or considerations that are applicable to the application but are not listed below.

(1) Consistency with the goals, policies and objectives of the Master Plan and any sub-area plans. If conditions have changed since the Master Plan was adopted, consistency with recent development trends in the area shall be considered.

(2) Consistency with the basic intent and purpose of this Zoning Ordinance.

(3) The capability of the street system to safely and efficiently accommodate the expected traffic generated by uses permitted in the requested zoning district.

(4) The capacity of the Township's utilities and services sufficient to accommodate the uses permitted in the requested district without compromising the health, safety and welfare of the Township.

(5) That conditions have changed since the Zoning Ordinance was adopted or there was an error in the Zoning Ordinance that justifies the amendment.

(6) That the amendment will not be expected to result in exclusionary zoning.

(7) If a rezoning is requested, compatibility of the site's physical, geological, hydrological, and other environmental features with the uses permitted in the proposed zoning district.

(8) If a rezoning is requested, compatibility of all the potential uses allowed in the proposed zoning district with surrounding uses and zoning in terms of land suitability, impacts on the environment, density, nature of use, traffic impacts, aesthetics, infrastructure and potential influence on property values.

(9) If a rezoning is requested, the boundaries of the requested rezoning district will be reasonable in relationship to surrounding zoning districts, and construction on the site will be able to meet the dimensional regulations for the requested zoning district.

(10) If a rezoning is requested, the requested zoning district is considered to be more appropriate from the Township's perspective than another zoning district.

(11) If a rezoning is requested to allow for a specific use, rezoning the land is considered to be more appropriate than amending the list of permitted or special land uses in the current zoning district to allow the use.

(12) If a rezoning is requested, the requested rezoning will not create an isolated or incompatible zone in the neighborhood.

(E) Notice of Adoption of Amendments (NEW SECTION). Following adoption of an amendment by the Township Board, 1 notice of adoption shall be filed with the Township Clerk and 1 notice shall be published in a newspaper of general circulation in the Township within 15 days after adoption, in accordance with the Michigan Zoning Enabling Act, Public Act 110 of 2006, as amended. A record of all amendments shall be maintained by the Township Clerk. A Zoning Map shall be maintained by the Township Clerk, which shall identify all map amendments.

(F) Protest Petition of Amendments (NEW SECTION). An amendment under this section is subject to a protest petition in accordance with Section 403 of the Michigan Zoning Enabling Act, PA 110 of 2006 (as amended), summarized as follows:

(1) Petition Submittal Requirements. The protest petition shall be presented to the Township Board before final legislative action on the amendment, and shall be signed by 1 or more of the following:

(a) The owners of at least 20 percent of the area of land included in the proposed change. Publicly-owned land shall be excluded in calculating the 20 percent land area.

(b) The owners of at least 20 percent of the area of land included within an area extending outward 100 feet from any point on the boundary of the land included in the proposed change. Publicly owned land shall be excluded in calculating the 20 percent land area.

(2) Vote. If a protest petition is filed, approval of the amendment to this Ordinance shall require a 2/3 vote of the Township Board.

(G) Referendum (NEW SECTION). Within 30 days following the passage of the Zoning Ordinance, a petition signed by a number of registered electors may be filed with the Township Clerk requesting submission of this Ordinance or part of this Ordinance to the electors for their approval, in accordance with Section 402 of the Michigan Zoning Enabling Act, PA 110 of 2006 (as amended).

(H) Rezoning (Zoning Map Amendment) with Conditions (NEW SECTION).

(1) Intent. The Planning Commission and Township Board recognize that, in certain instances, it would be an advantage to both the Township and to a property owner seeking rezoning if the property owner proposes certain conditions and limitations as part of a petition for rezoning. Therefore, it is the intent of this Section to provide a process consistent with the provision of Section 405 of the Michigan Zoning Enabling Act, PA 110 of 2006 (MCL 125.3405, as amended) to permit property owners to offer conditions regarding the use and/or development of land as part of the rezoning request. It is the further intent of this ordinance to accomplish, among other things, the objectives of the Zoning Ordinance and the Master Plan to achieve integration of the proposed land development project with the characteristics of the surrounding area.

(2) Definitions. The following definitions shall apply in the interpretation of this Section:

(a) "Applicant" shall mean the property owner, or a person acting with the written and signed authorization of the property owner to make application under this Section.

(b) "Rezoning Conditions" shall mean conditions regarding the development and use of property proposed by the applicant and approved by the Township as part of an approval under this Section, including review and recommendation by the Planning Commission.

(c) "Rezoning with Conditions Agreement" shall mean a written agreement approved and executed by the Township and property owner setting forth the conditions attached to the rezoning pursuant to MCL 125.3405 (as amended) and any other terms mutually agreed upon by the parties relative to land for which the Township has approved a Rezoning with Conditions.

(d) "Rezoning with Conditions Plan" shall mean a plan of the property which is the subject of a Rezoning with Conditions, prepared by a Michigan licensed civil engineer or architect, that may show the location, size, height, design, architecture or other measure or feature for and/or of buildings, structures, improvements and features on, and in some cases adjacent to, the property. The details to be offered for inclusion within the Rezoning with Conditions Plan shall be determined by the applicant, subject to approval of the Township Board after recommendation by the Planning Commission.

(e) "Rezoning" shall mean the amendment of this Ordinance to change the zoning map classification on property from its existing district to a new district classification.

(3) Authorization and Eligibility.

(a) The standards of this Section shall grant a property owner the option of voluntarily proposing conditions for the development and use of property in connection with a submission of a petition seeking a rezoning. Such conditions may be proposed at the time the application for rezoning is filed, or at a subsequent point in the process of review of the proposed rezoning.

(b) In order to be eligible for consideration of a Rezoning with Conditions, a property owner must propose a rezoning of property to a new zoning district classification, and must, as part of such proposal, voluntarily offer certain site-specific conditions (to be set forth in a Rezoning with Conditions Agreement) that are more strict or limiting than the regulations that would apply to the land under the proposed new zoning district. Such conditions may include, but are not limited to, the following:

(i) The location, size, height or other measure for and/or of buildings, structures, improvements, setbacks, landscaping, buffers, design, architecture and other physical features of the proposed development.

(ii) Specification of maximum density or intensity of development and/or use, expressed in terms fashioned for the particular development and/or use. For example: units per acre, maximum usable floor area, or hours of operation.

(iii) Preservation of open space, natural resources and/or natural features.

(iv) Improvements to address traffic issues, including paving, substantial improvements to or funding of improvements to major roads to the benefit of the entire Township.

(v) Site improvements such as signage, lighting, landscaping, building materials for the exterior of some or all structures above and beyond what would otherwise be required by Township Ordinance.

(vi) Limitations on permissible uses of the property.

(vii) Any other conditions that may be voluntarily proposed by the property owner.

(4) Application and Review Procedures.

(a) Application.

(i) At the time of making application for amendment of this ordinance seeking a rezoning of property, or at a later time during the process of Township consideration of such rezoning a property owner may submit a complete application for approval of a Rezoning with Conditions to apply in conjunction with the rezoning.

(ii) The application, which may be amended by the applicant during the process of consideration, shall specify the Rezoning Conditions proposed by the applicant, recognizing that Rezoning Conditions shall not authorize uses or development not permitted in the district proposed by the rezoning.

(iii) An application for a Rezoning with Conditions shall include a Rezoning with Conditions Agreement ("the Agreement"). The Agreement shall set forth the rezoning conditions and may incorporate a Rezoning with Conditions Plan. Rezoning with Conditions Agreements are subject to the requirements listed in *Section 14.05(H)(9)*.

(iv) The application shall include a notarized signature of the property owner indicating that the conditions attached to the rezoning are voluntarily offered.

(b) Planning Commission Review.

(i) The proposed Rezoning with Conditions shall be noticed for public hearing before the Planning Commission as a proposed legislative amendment of the Zoning Ordinance.

(ii) Following the public hearing, and further deliberations as deemed appropriate by the Planning Commission, the Planning Commission shall make a recommendation to the Township Board on the proposed Rezoning with Conditions, considering the review criteria set forth in *Section 14.05(H)(5)*.

(c) **Township Board Review.** Upon recommendation by the Planning Commission, the Township Board shall make a final determination to approve or deny the Rezoning with Conditions as offered by the applicant. The Township Board may only consider the conditions offered by the applicant, and may not attach any other conditions to the rezoning other than those offered by the applicant. The Township Board's deliberations shall include, but not be limited to, a consideration of the review criteria for a Rezoning with Conditions set forth in *Section 14.05(H)(5)*.

(5) **Review Criteria.** A Rezoning with Conditions shall only be approved if it meets the following requirements and standards:

(a) The proposed Rezoning with Conditions will further the goals and objectives of the Township Master Plan.

(b) Rezoning conditions shall not authorize uses or development not permitted in the district proposed by the rezoning (and shall not permit uses or development expressly or implicitly prohibited in the Rezoning with Conditions Agreement).

(c) The use of the property in question shall be in complete conformity with all regulations governing development and use within the zoning district to which the property is proposed to be rezoned, including, without limitation, permitted uses, lot area and width, setbacks, height limits, required facilities, buffers, open space areas, and land use density; provided, however, the following shall apply:

(i) Development and use of the property shall be subject to the more restrictive requirements shown or specified in the Rezoning with Conditions Agreement, and/or in other conditions and provisions set forth in the Rezoning with Conditions Agreement required as part of the Rezoning with Conditions approval. Such Rezoning with Conditions Agreement shall supersede all inconsistent regulations otherwise applicable under the Zoning Ordinance.

(ii) As part of the grant of final approval of a Rezoning with Conditions, the Township Board shall be authorized to grant modifications to the strict terms of the Zoning Ordinance governing dimensional requirements on the property; provided, such authorization to grant modifications shall be conditioned upon the Township Board finding that each Zoning Ordinance provision sought to be modified will result in an enhancement of the development that would be in the public interest, and that approving the modification would be consistent with the Township Master Plan and compatible with the surrounding area.

(d) The proposed Rezoning with Conditions will result in integration of the proposed land development project with the characteristics of the project area, and result in an enhancement of the project area as compared to the existing zoning, and such

enhancement would be unlikely to be achieved or would not be assured in the absence of the use of a Rezoning with Conditions.

(e) As compared to the existing zoning and considering the site-specific conditions and/or land use proposed by the applicant, it would be in the public interest to grant the Rezoning with Conditions. In determining whether approval of a proposed application would be in the public interest, the benefits which would reasonably be expected to accrue from the proposal shall be balanced against and be found to clearly outweigh the reasonably foreseeable detriments, taking into consideration reasonably accepted planning, engineering, environmental and other principles, and also taking into consideration the special knowledge and understanding of the Township by the Township Board and Planning Commission.

(f) The proposed conditions will not preclude future zoning and planning actions by or on behalf of the municipality.

(g) Existing and available public services will be capable of serving proposed or potential development that will occur as a result of the Rezoning with Conditions without negatively impacting the delivery of public services to other properties in the Township, or the conditions will ensure that public services will be sufficient to serve both the site and other properties in the Township.

(h) The offered condition(s) are beneficial to the public good and likely to be enforceable.

(i) The condition does not have the same effect as a use variance.

(j) The proposed conditions do not relieve the applicant of the responsibility of securing any applicable site plan, plat, condominium, or special land use approvals.

(6) Effect of Approval. Approval of the Rezoning with Conditions and Rezoning with Conditions Agreement confirms only the rezoning of the property, subject to any conditions reflected in the Rezoning with Conditions Agreement and after recordation as set forth in Paragraph H below. Any applicable site plan, plat, condominium, special land use, or variance approvals shall be required before any improvements to the property may be undertaken.

If approved, the zoning district classification of the rezoned property shall consist of the district to which the property has been rezoned, accompanied by a reference to "CR Rezoning with Conditions". The Zoning Map shall specify the new zoning district plus a reference to "CR" e.g., the district classification for the property might be "C-1, General Business (CR, Rezoning with Conditions)", with a Zoning Map Designation of "C-1/CR." Use of the property so classified and approved shall comply with the conditions set forth in the Rezoning with Conditions Agreement. No development or use of the land inconsistent with the conditions of the Rezoning with Conditions Agreement shall be permitted.

(7) Compliance with Conditions.

(a) Any person who establishes a development or commences a use upon land that has been rezoned with conditions shall continuously operate and maintain the development or use in compliance with all of the conditions set forth in the Rezoning with Conditions Agreement. Any failure to comply with a condition contained within the Rezoning with Conditions Agreement shall constitute a violation of this Zoning Ordinance and shall be punishable accordingly. Additionally, any such violation shall be deemed a nuisance per se and subject to judicial abatement as provided by law.

(b) No permit or approval shall be granted under this Ordinance for any use or development that is contrary to an applicable Rezoning with Conditions Agreement.

(8) Period of Approval.

(a) The Rezoning with Conditions and Agreement shall expire after a period of 1 year from the effective date of the Rezoning unless substantial progress towards obtaining site plan and other required approvals has been made, and shall expire after a period of 2 years unless development of the property is substantially begun within such 2-year period and proceeds diligently and in good faith as required by ordinance to completion.

(b) In the event substantial progress towards obtaining site plan and other required approvals has not commenced within 1 year and bona fide development has not commenced within 2 years from the effective date of the rezoning, the Rezoning with Conditions and the Rezoning with Conditions Agreement shall be void and of no effect.

(c) The property owner may apply for a 1-year extension 2 times. The request must be submitted to the Department of Development Services before the approval time limit expires. The property owner must demonstrate why the extension should be granted, and must also demonstrate that there is a strong likelihood that the development or use will commence within the period of extension and proceed diligently thereafter to completion, and if the Township Board finds that there has not been a change in circumstances that would render the Rezoning with Conditions incompatible with adjacent or nearby use and zoning of land or is otherwise inconsistent with sound zoning policy.

An extension request shall be considered by the Township Board following a recommendation by the Planning Commission.

(d) If the Rezoning with Conditions becomes void in the manner provided in this section, the following procedures shall apply:

(i) The property owner may seek a new rezoning of the property within 30 days of the expiration of the period of approval.

(ii) If no application is made for a new rezoning of the property, the land shall revert to its former zoning classification as set forth in MCL 124.286i (as

amended). The Township Board shall direct the Planning Commission to proceed with consideration of rezoning the land to its former zoning designation following the standard rezoning procedures set forth in this Zoning Ordinance.

(iii) Until such time as a new zoning district classification of the property has become effective, no development shall be undertaken or permits for development issued.

(9) Rezoning with Conditions Agreement Requirements. A Rezoning with Conditions Agreement shall be executed between the applicant and the Township at the time of Township Board approval of a Rezoning with Conditions.

(a) Rezoning with Conditions Agreements shall, at a minimum, contain all of the following items:

(i) Identification of the requested zoning district and a listing of the conditions offered by the applicant.

(ii) A statement acknowledging that the Rezoning with Conditions was proposed by the applicant, and, further agreement and acknowledgment that the conditions and Rezoning with Conditions Agreement are authorized by all applicable state and federal law and constitution, and that the Agreement is valid and was entered into on a voluntary basis and represents a permissible exercise of authority by the Township.

(iii) Agreement and understanding that the property in question shall not be developed or used in a manner inconsistent with the Rezoning with Conditions Agreement.

(iv) Agreement and understanding that the approval and Rezoning with Conditions Agreement shall be binding upon and inure to the benefit of the property owner and Township, and their respective heirs, successors, assigns, and transferees.

(v) The date upon which the Rezoning with Conditions becomes void, as specified in *Section 14.05(H)(6)*. If the Township Board grants an extension of approval, a new Rezoning with Conditions Agreement with the new expiration date shall be recorded.

(vi) Agreement and understanding that, if a Rezoning with Conditions becomes void in the manner provided in this *Section 14.05(H)(8)*, no development shall be undertaken or permits for development issued until a new zoning district classification of the property has been established.

(vii) Agreement and understanding that each of the requirements and conditions in the Rezoning with Conditions Agreement represents a necessary and reasonable measure which, when considered with all other conditions and requirements, is roughly proportional to the increased impact created by the use represented in

the approved Rezoning with Conditions, taking into consideration the changed zoning district classification and the specific use authorization granted.

(viii) A legal description of the property affected by the Rezoning with Conditions.

(ix) Development regulations affected by the conditions of rezoning, including but not limited to density, setbacks, height, site coverage, signs, parking, architecture, etc.

(x) Revocation of approval provisions returning the property to its original zoning designation if the developer violates the terms of the Agreement.

(b) A Rezoning with Conditions Plan may be included as an exhibit to the Agreement. The Rezoning with Conditions Plan may show the conceptual layout of the proposed development or use, along with any other information deemed relevant by the applicant. Inclusion of a Rezoning with Conditions Plan as an exhibit to a Rezoning with Conditions Agreement shall not replace the requirement for preliminary and final site plan, subdivision, condominium, special land use or variance review and approval.

(10) Amendment of Rezoning with Conditions Agreement. Amendment of a Rezoning with Conditions Agreement shall be proposed, reviewed and approved in the same manner as a new Rezoning with Conditions.

(11) Recordation of Rezoning with Conditions Agreement. A Rezoning with Conditions shall become effective following publication in the manner provided by law, and, after recordation of the Rezoning with Conditions Agreement, whichever is later. All Rezoning with Conditions Agreements shall be recorded with the Grand Traverse County Register of Deeds.

(12) Termination. The Township Board shall be the only body with the authority to terminate a Rezoning with Conditions agreement. The consideration to terminate the agreement shall be for reasons of expiration of the agreement, discovery of false information upon which the initial approval was based, or the existence or discovery of new information that alters the viability of the approved rezoning. The Termination shall comply with any applicable provisions of this ordinance or the Rezoning with Conditions Agreement.

(13) Township Right to Rezone. Nothing in the Rezoning with Conditions Agreement or in the provisions of this Section shall be deemed to prohibit the Township from rezoning all or any portion of land that is subject to a Rezoning with Conditions to another zoning classification. Any such rezoning shall be conducted in compliance with this Ordinance and the Michigan Zoning Enabling Act (MCL 125.3405, as amended).

If land that is subject to a Rezoning with Conditions Agreement is thereafter rezoned to a different zoning classification or to the same zoning classification but with a different or no Rezoning with Conditions Agreement, the Rezoning with Conditions Agreement attached to the former zoning classification shall cease to be in effect. In such a case, the Township Clerk shall record with the Grand Traverse County Register of Deeds a notice

that the Rezoning with Conditions is no longer in effect upon the property owner's written request.

(14) **Fee.** The applicant for a Rezoning with Conditions shall pay as a fee the Township's costs and expenses incurred by the Township in the review of any Rezoning with Conditions. An escrow shall be established in an amount specified by Township Board Resolution, and additional reasonable amounts shall be contributed as required in order to complete the process of review and approval. Any unexpended amounts from such escrow shall be returned to the applicant.

Section 14.06 Public Hearing Procedures (currently Sections 7.12.1(8)(a) and 8.1.2(3))

Commented [PS91]: The text of Sections 7.12.1(8)(a) and 8.1.2(3) is proposed to be deleted and replaced with the following in this Section.

(A) **Public Hearings (NEW SECTION).** The body charged with conducting a public hearing required by this Ordinance shall, upon receipt of a completed application, select a reasonable time and place for such hearing. Such hearings shall be subject to the procedures set forth in the Michigan Zoning Enabling Act, Public Act 110 of 2006, as amended. The public hearing procedures of P.A. 110 in effect at the date of adoption are summarized as follows. Any further amendments to P.A. 110 that alter the public hearing procedure requirements following the date of adoption of this Zoning Ordinance will supersede the following procedures.

(B) **General Public Hearing Procedures (NEW SECTION).** The following procedures are applicable to all public hearings except zoning ordinance text and map amendments, which are described in *Section 14.06(C)*, below.

(1) **Publication in a Newspaper of General Circulation.** Notice of the request shall be published in a newspaper of general circulation not less than 15 days before the date the application will be considered for approval.

(2) **Personal and Mailed Notice.**

(a) Notice shall be sent by mail or personal delivery to the owners of property for which approval is being considered.

(b) Notice shall be sent to all persons to whom real property is assessed within 300 feet of the property, regardless of municipal jurisdiction.

(c) Notice shall be given to the occupants of all structures within 300 feet of the property regardless of municipal jurisdiction. Notification need not be given to more than 1 occupant of a structure, except that if a structure contains more than 1 dwelling unit or spatial area leased by different persons, 1 occupant of each unit or spatial area shall be given notice. If a single structure contains more than 4 dwelling units or other distinct spatial areas owned or leased by different persons, notice may be given to the manager or owner of the structure who shall be requested to post the notice at the primary entrance(s) to the structure.

(d) All notice delivered by mail or personal delivery must be given not less than 15 days before the date of the public hearing. Notice shall be deemed given when personally delivered or when deposited during normal business hours for delivery with the U.S. Postal Service or other public or private delivery service. If the name of the occupant is not known, the term "occupant" may be used for the intended recipient of the notice.

(e) The Township shall prepare a list of property owners and occupants to whom notice was mailed.

(3) Content. Any notice published in a newspaper or delivered by mail shall:

(a) Describe the nature of the request.

(b) Indicate the property that is the subject of the request.

(c) Include a listing of all existing street addresses within the property. If no such addresses exist, other means of identifying the property may be used.

(d) When and where the public hearing will occur.

(e) When and where written comments may be submitted concerning the request.

(C) Zoning Ordinance Amendment Public Hearing Procedures (NEW SECTION). Public hearings for Zoning Ordinance amendments, including both text and map amendments, shall be noticed as follows:

(1) Map Amendments Affecting 10 or Fewer Adjacent Parcels. If the proposed map or text amendment will impact 10 or fewer adjacent parcels, notice shall be given as specified in *Section 14.06(B)*.

(2) Text Amendments, or Map Amendments Affecting 11 or More Adjacent Parcels. If a text amendment is proposed or map amendment is proposed that will impact 11 or more adjacent parcels, notice shall be given as specified in *Section 14.06(B)*, with the exception that *Section 14.06(B)(2)* and *Section 14.06(B)(3)(c)* do not apply.

(3) Notice to Other Entities. Notice of the time and place of the public hearing shall also be given by mail to any of the following entities that have registered their name with the Township Clerk for the purposes of receiving public notice: any electric, gas, or pipeline public utility company; each telecommunication service provider; each railroad operating within the district or zone affected; and the airport manager of each airport.

(4) Additional Information Required in Notice. Any notice required under this section shall include the places and times at which the proposed text or map amendment may be examined.

Section 14.07 Enforcement

(A) Violations and Penalties (currently Sections 4.2.1 and 11.1). Any person, firm, association, corporation, company, or other entity which shall violate any provision of this Ordinance in any particular, or who falls to comply with any of the regulatory measures or conditions imposed by the Planning Commission, Zoning Board of Appeals or the Township Board pursuant to this Ordinance or otherwise pursuant to Michigan law, shall, unless such violation has abated, ceased to exist or otherwise been remedied within 15 days after being provided with written notice of such violation from the Enforcement Officer, be deemed to be responsible for a municipal civil infraction as defined by Michigan statute, which shall be punishable by a civil fine of five hundred dollars ($500) for each violation to be determined by the Court, along with costs which may include all expenses, direct and indirect, to which the Township has been put in connection with municipal infraction.

Deleted: fifteen (

Deleted:)

Deleted: Costs of not more than $500.00 shall be ordered.

A violator of this Ordinance shall also be subject to such additional sanctions and judicial orders as are authorized under Michigan law. Each day that a violation continues to exist shall constitute a separate violation of this Ordinance. Provisions of this Ordinance may also be enforced by suit for injunctive relief.

Deleted: ¶
Any person who shall violate any provision of this Ordinance in any particular, or who fails to comply with any of the regulatory measures or conditions of the Board of Appeals adopted pursuant hereto, shall, upon conviction thereof, be fined not to exceed $100.00 or may be imprisoned not to exceed ninety (90) days, or may be both fined and imprisoned in the discretion of the Court, and each day such violation continues shall be deemed a separate offense¶

(B) Nuisance Per Se (currently Section 11.2). Uses of land, dwellings, buildings or structures, including tents and trailer coaches used, erected, altered, razed or converted in violation of any provision of this Ordinance or the regulatory measures or conditions of the Township Board, Planning Commission, or Zoning Board of Appeals adopted pursuant hereto are hereby declared to be nuisances per se.

(C) Escrow (currently Section 4.3). If any commission or board determines that the basic fees will not cover the actual costs of the application review or appeal, or if any commission or board determines that review of the application and/or participation in the review process or appeal by qualified professional planners, engineers, attorneys, or other professionals is necessary, then the applicant shall deposit with the Township Treasurer such additional zoning fees in an amount determined by any commission or board equal to the estimated additional costs. The additional zoning fees shall be held in escrow in the applicant's name and shall be used solely to pay these additional costs. If the amount held in escrow becomes less than 20 percent of the latest escrow deposit and review of the application or decision on the appeal is not completed, then any commission or board may require the applicant to deposit additional fees into escrow in an amount determined by any commission or board to be equal to the estimated costs to complete the review or decide the appeal. Failure of the applicant to make any escrow deposit required under this Ordinance shall be deemed to make the application incomplete or the appeal procedurally defective, thereby justifying the denial of the application or the dismissal of the appeal. Any unexpended funds held in escrow shall be returned to the applicant following final action on the application or the final decision on the appeal. Any actual costs incurred by the Township in excess of the amount held in escrow shall be billed to the applicant and shall be paid by the applicant prior to the issuance of any permit or the release of a final decision on an appeal.